DOUGLAS COUNTY TAHOE JUSTICE COURT BOILER AND DOMESTIC HOT WATER GENERATOR REPLACEMENT

175 US-50
STATELINE, NEVADA 89449

FOR

DOUGLAS COUNTY PUBLIC WORKS

1120 AIRPORT ROAD, BUILDING F-2
MINDEN, NV 89423

VICINITY MAP

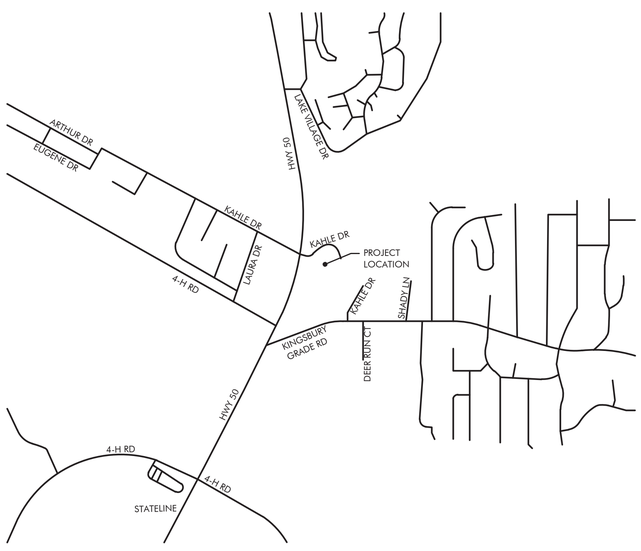

NO SCALE

LOCATION MAP

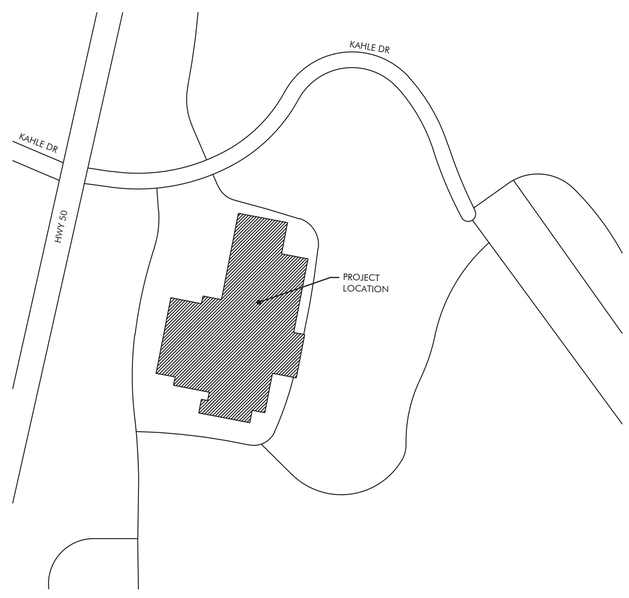

NO SCALE

DIRECTORY

OWNER

DOUGLAS COUNTY PUBLIC WORKS
1120 AIRPORT ROAD
MINDEN, NV 89423

CONTACTS: GLEN RADTKE
MAINTENANCE AND OPERATING SUPERINTENDENT
(775) 782-9838

SCOTT McCULLOUGH
PROJECT MANAGER
(775) 790-5212

CONSULTANTS

MECHANICAL

CR ENGINEERING
5434 LONGLEY LANE
RENO, NEVADA 89511
PHONE: (775) 826-1919
FAX: (775) 826-1918
WEB: CR-ENG.COM

CONTACT: CHUN LEE, P.E.
PROJECT MANAGER

ELECTRICAL

JENSEN ENGINEERING INC.
Electrical Engineers
9655 Gateway Drive
Ph. (775) 852-2288
email: jeneng@nvbell.net
Reno, Nevada 89521-2968
Fax (775) 852-3388
web: www.jeneng.com

CONTACT: GERALD JENSEN, P.E.
PRINCIPAL ENGINEER

GENERAL NOTES

1. THE PROJECT SPECIFICATIONS AND DRAWINGS ARE A DOCUMENT SET AND SHOULD NOT BE SEPARATED. INFORMATION AND REFERENCES ARE CONTAINED IN ALL SPECIFICATIONS AND DRAWINGS.
2. IT IS THE CONTRACTOR'S RESPONSIBILITY TO FULLY UNDERSTAND THE COMPLETE SET OF SPECIFICATIONS AND THE DRAWINGS FOR THIS PROJECT. IT IS THE CONTRACTOR'S RESPONSIBILITY TO REVIEW ALL OF THE INFORMATION CONTAINED IN THE SPECIFICATIONS AND DRAWINGS, INCLUDING ALL OTHER DISCIPLINES (ARCHITECTURAL, ELECTRICAL, STRUCTURAL, ETC.) PRIOR TO BID AND CONSTRUCTION.
3. THE CONTRACTOR SHALL INSTALL THE NEW EQUIPMENT, AND PIPING AROUND ALL EXISTING OBSTACLES INCLUDING: ELECTRICAL CONDUIT, DOMESTIC WATER PIPING, WASTE AND VENT PIPING, CHILLED AND HEATING WATER PIPING, AND FIRE SPRINKLER PIPING. PROVIDE OFFSETS TO AVOID RELOCATION OF OTHER UTILITIES. RELOCATE UTILITIES IF THEY ARE IN CONFLICT WITH THE MECHANICAL SYSTEM INSTALLATION, CAUSE DEVIATIONS IN THE DESIGN INTENT, UNSATISFACTORY OPERATION, NOISY CONDITIONS, OR INTERFERE WITH MAINTENANCE. IT IS THE MECHANICAL CONTRACTOR'S RESPONSIBILITY TO COORDINATE ANY UTILITY RELOCATION WITH THE APPROPRIATE SUBCONTRACTOR.
4. THE INFORMATION INDICATED ON THESE DRAWINGS AS EXISTING IS BASED UPON INFORMATION TAKEN FROM AS-BUILT DRAWINGS, FIELD INVESTIGATION, AND INFORMATION OBTAINED FROM SUBMITTAL DATA, ETC. THE PLANS DO NOT GUARANTEE ACCURACY BUT ARE ONLY AN INDICATION OF EXISTING CONDITIONS. IT IS THE CONTRACTOR'S RESPONSIBILITY TO FIELD VERIFY EXACT CONDITIONS SUCH AS EQUIPMENT PLACEMENT, DUCTWORK (SIZE, ROUTING, AND ELEVATION), PIPING (SIZE, ROUTING, AND ELEVATION), ETC. THE DRAWINGS ARE INTENDED TO PROVIDE THE CONTRACTOR AN INDICATION OF THE SYSTEM INSTALLED IN THE FACILITY TO DATE. IT WILL BE THE CONTRACTOR'S RESPONSIBILITY TO MAKE ADJUSTMENTS TO THE DRAWING INFORMATION AS REQUIRED TO MATCH EXISTING FIELD CONDITIONS.
5. ALL ROOF-MOUNTED EQUIPMENT OR PENETRATIONS ASSOCIATED WITH THIS PROJECT ARE TO BE FLASHED BY A LICENSED ROOFING CONTRACTOR. THE ROOFING CONTRACTOR SHALL HAVE EXPERIENCE WITH THE EXISTING ROOFING MEMBRANE. NEW FLASHING MATERIALS SHALL BE INSTALLED TO COMPLY WITH THE MEMBRANE MANUFACTURER'S SPECIFICATIONS OR DETAILS PUBLISHED BY THE NATIONAL ROOFING CONTRACTORS ASSOCIATION WATERPROOFING MANUAL. IN ACCEPTANCE OR REJECTION OF THE WORK, THE OWNER WILL MAKE NO ALLOWANCE FOR LACK OF SKILL ON THE PART OF THE CONTRACTOR.

SHEET INDEX

GENERAL INFORMATION

T0.1 TITLE SHEET

MECHANICAL PLUMBING

M0.1 MECHANICAL ABBREVIATIONS, LEGEND, AND CALCULATIONS
M0.2 MECHANICAL SCHEDULES
M0.3 MECHANICAL COMPLIANCE CERTIFICATE
M1.1 MECHANICAL DEMOLITION FLOOR PLAN
M1.2 MECHANICAL DEMOLITION 2ND FLOOR PLAN
M1.3 MECHANICAL DEMOLITION ISOMETRICS
M1.4 MECHANICAL DUCT LENGTH ISOMETRICS
M2.1 MECHANICAL FLOOR PLAN
M2.2 MECHANICAL 2ND FLOOR PLAN
M2.3 MECHANICAL ISOMETRICS
M2.4 MECHANICAL ISOMETRICS
M4.1 MECHANICAL PIPING DIAGRAM
M5.1 MECHANICAL DETAILS
M6.1 MECHANICAL CONTROL DIAGRAMS AND SEQUENCE OF OPERATION
M6.2 MECHANICAL CONTROL DIAGRAMS AND SEQUENCE OF OPERATIONS
M6.3 MECHANICAL CONTROL DIAGRAMS AND SEQUENCE OF OPERATIONS

ELECTRICAL

E0.1 ELECTRICAL SYMBOLS & MECHANIC AL EQUIPMENT CONNECTION SCHEDULE
E0.2 ELECTRICAL SPECIFICATIONS
E0.3 SINGLE-LINE DIAGRAM
E1.0 OVERALL ELECTRICAL FLOOR PLAN
E1.1 ELECTRICAL DEMOLITION FLOOR PLAN
E2.1 ELECTRICAL FLOOR PLAN

PROJECT NOTE

1. CONTRACTOR TO PROVIDE A TEMPORARY 50 GALLON ELECTRIC WATER HEATER, 460V/3Ø/60, 6KW FOR TEMPORARY DOMESTIC HOT WATER, SEE ELECTRICAL DRAWINGS.

BUILDING CODES

2012 INTERNATIONAL BUILDING CODE
2012 INTERNATIONAL FIRE CODE
2012 UNIFORM MECHANICAL CODE
2012 INTERNATIONAL ENERGY CONSERVATION CODE
2012 UNIFORM PLUMBING CODE
2011 NATIONAL ELECTRICAL CODE

CR ENGINEERING
MECHANICAL ENGINEERING CONSULTANT
5434 LONGLEY LANE
RENO, NEVADA 89511
PHONE: 775.826.1919
FAX: 775.826.1918
WEB: CR-ENG.COM

THESE DRAWINGS ARE INSTRUMENTS OF SERVICE AND THE DESIGNS ARE THE EXCLUSIVE PROPERTY OF CR ENGINEERING. THIS DRAWING MAY NOT BE REPRODUCED IN ANY WAY, INCLUDING DESIGN CONCEPTS AND IDEAS, WITHOUT THE EXPRESS WRITTEN AUTHORIZATION FROM CR ENGINEERING.

SEAL:

BID DOCUMENTS

CONSULTANT:

DOUGLAS COUNTY TAHOE JUSTICE COURT
BOILER AND DOMESTIC HOT WATER
GENERATOR REPLACEMENT

TITLE SHEET

REVISIONS:

REV.	DESCRIPTION	DATE
-	-	-
-	-	-
-	-	-
-	-	-
-	-	-
-	-	-

DRAWN BY:	RT
DESIGNED BY:	CL
CHECKED BY:	CL
APPROVED BY:	CLR
DATE:	01/29/19
PROJECT NO:	123918

SHEET NUMBER:

T0.1

W:\2018\123918\Dwgs\T0.1.dwg
1/29/2019 11:22 AM By: Michael Barlowe

ABBREVIATIONS

ACFM	ACTUAL CUBIC FEET PER MINUTE
AF	AIR FILTER
AFF/AFG	ABOVE FINISHED FLOOR/GRADE
A	AMPERE
APD	AIR PRESSURE DROP
BFF/BFG	BELOW FINISHED FLOOR/GRADE
BHP	BRAKE HORSEPOWER
BTUH	BRITISH THERMAL UNITS PER HOUR
CFM	CUBIC FEET PER MINUTE
COP	COEFFICIENT OF PERFORMANCE
Cv	VALVE FLOW COEFFICIENT
(D)	DEMOLISH
DB,WB	DRY BULB, WET BULB TEMPERATURE
dBA	DECIBELS, A-WEIGHTED MEASUREMENT
DIA	DIAMETER
DN	DOWN
DP	DIFFERENTIAL PRESSURE
EFF	EFFICIENCY
EER	ENERGY EFFICIENCY RATIO
(E)	EXISTING
EAT/LAT	ENTERING/LEAVING AIR TEMPERATURE
ESP	EXTERNAL STATIC PRESSURE
EWT/LWT	ENTERING/LEAVING WATER TEMPERATURE
FLA	FULL LOAD AMPERES
FPM	FEET PER MINUTE
FT	FOOT
FT^2	SQUARE FOOT
FT^3	CUBIC FOOT
GA	GAUGE
GPM	GALLONS PER MINUTE
HP	HORSEPOWER
HZ	HERTZ
IN	INCH
IN^2	SQUARE INCH
IN^3	CUBIC INCH
KW	KILOWATT
LBS	POUNDS
LRA	LOCKED ROTOR AMPERES
MAX	MAXIMUM
MBH	THOUSAND BRITISH THERMAL UNITS PER HOUR
MCA	MINIMUM CIRCUIT AMPACITY
MERV	MINIMUM EFFICIENCY REPORTING VALUE
MIN	MINIMUM
MOCP	MAXIMUM OVERCURRENT PROTECTION
(N)	NEW
NC	NOISE CRITERIA
PPM	PARTS PER MILLION
PSI	POUNDS PER SQUARE INCH
PSIG	POUNDS PER SQUARE INCH GAUGE
R	REGISTER
RPM	REVOLUTIONS PER MINUTE
SEER	SEASONAL ENERGY EFFICIENCY RATIO
TDH	TOTAL DYNAMIC HEAD
TG	TRANSFER GRILLE
TSP	TOTAL STATIC PRESSURE
TYP	TYPICAL
V	VOLTS
W	WATT
WC/WG	WATER COLUMN/GAUGE

SYMBOL LEGEND

SYMBOL	ABBR.	DESCRIPTION
	SA	SUPPLY AIR
	RA	RETURN AIR
	EA	EXHAUST AIR
	OA	OUTSIDE AIR
		POSITIVE PRESSURE DUCT SECTION - FIRST SIZE IS TOP
		NEGATIVE PRESSURE DUCT SECTION - FIRST SIZE IS TOP
20x10		DUCT SIZE - FIRST SIZE IS SIDE SHOWN
	(L)	LINED DUCT
		FLEXIBLE DUCT
		FLEXIBLE DUCT CONNECTOR
	MVD	MANUAL VOLUME DAMPER
	OBD	OPPOSED BLADE DAMPER
	PBD	PARALLEL BLADE DAMPER
FD	FD	FIRE DAMPER
SD	SD	SMOKE DAMPER
FSD	FSD	COMBINATION FIRE/SMOKE DAMPER
M		MOTORIZED ACTUATOR
B		SPRING WOUND BYPASS TIMER @ 48" AFF
T	TSTAT	THERMOSTAT OR TEMPERATURE SENSOR @ 48" AFF
S	SD	SMOKE DETECTOR
	CD	CEILING DIFFUSER
	LD	LINEAR DIFFUSER
	SW	SIDE WALL DIFFUSER
	EG/RG	EXHAUST/RETURN GRILLE
	BFP	BACKFLOW PREVENTER
	BV	BALL VALVE
	BFV	BUTTERFLY VALVE
	CV	CHECK VALVE
	FCV	FLOW CONTROL (BALANCE) VALVE
	GV	GATE VALVE
	GBV	GLOBE VALVE
	PRV	PRESSURE REDUCING VALVE
	PTRV	PRESSURE AND TEMPERATURE RELIEF VALVE
	TCV	TEMPERATURE CONTROL VALVE (2-WAY OR 3-WAY)
	TDV	TRIPLE DUTY VALVE
	STR	STRAINER
		UNION
		PIPE BREAK
		PIPE CAP OR PLUG
	ELL	PIPE ELBOW
		PIPE ELBOW DOWN
		PIPE ELBOW UP
		PIPE TEE
		PIPE RISER
		PIPE DROP
		PIPE BRANCH, TOP CONNECTION
		PIPE BRANCH, BOTTOM CONNECTION
	PA	PIPE ANCHOR
		PIPE ALIGNMENT GUIDE
	FLEX	FLEXIBLE PIPE CONNECTOR
M		WATER METER
P T		PRESSURE SENSOR, TEMPERATURE SENSOR WITH WELL
P T		PRESSURE GAUGE, TEMPERATURE GAUGE
PT	PT	PRESSURE AND TEMPERATURE TEST PORT
	P	PUMP
CHS/R	CHS/CHR	CHILLED WATER SUPPLY/RETURN PIPING
HWS/R	HWS/HWR	HOT WATER SUPPLY/RETURN PIPING
D	D	EQUIPMENT OR CONDENSATE DRAIN PIPING
	CW	COLD WATER
G	G	LOW PRESSURE GAS PIPING
	DHW	DOMESTIC HOT WATER
	DHWR	DOMESTIC HOT WATER RETURN
	FD	FLOOR DRAIN
	FS	FLOOR SINK
	POC	POINT OF CONNECTION
	POD	POINT OF DISCONNECT

ENGINEERING
MECHANICAL ENGINEERING CONSULTANT

5434 LONGLEY LANE
RENO, NEVADA 89511
PHONE: 775.826.1919
FAX: 775.826.1918
WEB: CR-ENG.COM

THESE DRAWINGS ARE INSTRUMENTS OF SERVICE AND THE DESIGNS ARE THE EXCLUSIVE PROPERTY OF CR ENGINEERING. THIS DRAWING MAY NOT BE REPRODUCED IN ANY WAY, INCLUDING DESIGN CONCEPTS AND IDEAS, WITHOUT THE EXPRESS WRITTEN AUTHORIZATION FROM CR ENGINEERING.

SEAL:

PROFESSIONAL ENGINEER - STATE OF NEVADA
CHRISTOPHER L. ROUNDS
Exp: 12-31-19
MECHANICAL
No. 13968
1/29/19

BID DOCUMENTS

CONSULTANT:

DOUGLAS COUNTY TAHOE JUSTICE COURT
BOILER AND DOMESTIC HOT WATER
GENERATOR REPLACEMENT

MECHANICAL ABBREVIATIONS,
LEGEND AND, CALCULATIONS

REVISIONS:

REV.	DESCRIPTION	DATE
-	-	-
-	-	-
-	-	-
-	-	-
-	-	-
-	-	-

DRAWN BY:	RT
DESIGNED BY:	CL
CHECKED BY:	CL
APPROVED BY:	CLR
DATE:	01/29/19
PROJECT NO:	123918

SHEET NUMBER:

M0.1

W:\2018\123918\dwgs\123918 M0.1 MECH ABB, LEGEND, CALCS, AND SCHEDULE.dwg
1/29/2019 11:22 AM By: Moises Barajas

CONDENSING BOILER SCHEDULE

UNIT GENERAL DATA					ELECTRICAL		OUTPUT DATA												
B —	SERVICE	MANUFACTURER	MODEL	OPERATING WEIGHT (LBS)	VOLTS/Ø/Hz	AMPS	INPUT (BTUH)	OUTPUT AT ELEVATION (BTUH)	FLUID	FLUID FLOW (GPM)	LWT (°F)	EWT (°F)	MAX WPD (FT WC)	VENT SIZE (IN)	VENT MATERIAL	COMBUSTION AIR SIZE (IN)	COMBUSTION AIR MATERIAL	UNIT OPTION
1	BUILDING	AERCO	BMK1000 GWBF-USA-9SA	400	120/1/60	13	1,000,000	790,000	40% GLYCOL	55	180	150	5	8	AL29-4C	N/A	N/A	A,B,C,D,E,F,G,H,I,J,K,L,M,N,O,P,Q,R,S
2	BUILDING	AERCO	BMK1000 GWBF-USA-9SA	400	120/1/60	13	1,000,000	800,000	40% GLYCOL	55	180	150	5	8	AL29-4C	N/A	N/A	A,B,C,D,E,F,G,H,I,J,K,L,M,N,O,P,Q,R,S

GENERAL NOTES:

1. DESCRIPTION: FULLY MODULATING, STAINLESS STEEL HEAT EXCHANGER, CONDENSING GAS FIRED BOILER.
2. OUTPUT IS SHOWN FOR 6,300 FT ELEV.
3. OUTPUT OF BOILER ACCOUNTS FOR 40% PROPYLENE GLYCOL
4. COMBUSTION AIR AND FLUE TO BE SIZED PER MANUFACTURER'S CALCULATION. INDICATED COMBUSTION AIR AND FLUE SIZES ARE SHOWN FOR SPECIFIED BOILER ONLY, CONTRACTOR TO INCLUDE MANUFACTURER'S FLUE CALCULATION WITH SUBMITTALS.
5. SPECIFIED BOILER REQUIRES AN ALTITUDE DERATE OF 0.92 AT THE SPECIFIED DESIGN CONDITION, AS TESTED PER THIRD PARTY TESTING IN ACCORDANCE TO ANSI Z21.13. IF SPECIFIED BOILER IS NOT PROVIDED, CONTRACTOR TO PROVIDE LETTER FROM MANUFACTURER INDICATING SUBSTITUTE BOILER HAS HAS BEEN THIRD PARTY TESTED IN ACCORDANCE TO ANSI Z21.13 OR CONTRACTOR IS TO PROVIDE BOILER WITH THE SPECIFIED OUTPUT. LARGER INPUT MAY REQUIRE LARGER GAS PIPING, FLUE, AND COMBUSTION AIR.

OPTIONS/FEATURES:

A. MODULATING BURNER W/20:1 FIRING TURN DOWN RATIO.
B. SPARK IGNITION.
C. ADJUSTABLE HIGH LIMIT AND MANUAL RESET TEMPERATURE CONTROL.
D. FLOW SWITCH AND LOW WATER CUTOFF SWITCH, SO THAT BOILER IS COMPLIANT WITH CSD-1 AND NEVADA BOILER CODE.
E. ASME RATED PRESSURE RELIEF VALVE, SET AT 75 PSI.
F. SEQUENTIAL AND DIAGNOSTIC CONTROL PANEL.
G. DIGITAL DISPLAY WITH ALARM AND STATUS ON A TOUCH SCREEN.
H. VENT MATERIAL SHALL BE SINGLE WALL AL29-4C STAINLESS STEEL.
I. 86% OPERATING THERMAL EFFICIENCY AT 150°F RETURN WATER TEMPERATURE AND 100% INPUT
J. CONTACTS ON ANY FAILURE.
K. MANUFACTURER'S CONDENSATE NEUTRALIZATION KIT.
L. 0-10 VDC BUILDING MANAGEMENT SYSTEM INPUT.
M. FACTORY SYSTEM HEADER SENSOR WITH IMMERSION WELL.
N. FACTORY TRAINING AND AUTHORIZED START-UP.
O. PRIMARY BOILER PUMP RELAY MOUNTED AND WIRED TO ENERGIZE BOILER INJECTING PUMP.
P. INTEGRATED BOILER DRAIN VALVE.
Q. MANUFACTURER'S BOILER CONTROLLER WITH LEAD/LAG CONTROLS, SEE CONTROL DRAWINGS.
R. PROVIDE FACTORY LEVEL TRAINING FOR (3) DOUGLAS COUNTY TECHNICIANS
S. MANUFACTURER'S BACNET CONTROLLER

EQUIPMENT SCHEDULE

CFT 1 — CHEMICAL FEED TANK
NU-CALGON MODEL 20L FLAT BOTTOM, MILD STEEL, 2 GALLON MICROMET CHEMICAL FEEDER WITH 3½" QUARTER TURN CAP AND TWO 3/4" NPT PORTS. SEE BOILER PIPING DIAGRAM FOR CONFIGURATION. CONTRACTOR TO ADD CHEMICAL WATER FEEDER AS NEEDED.
OPER. WT.: 50 LBS.

BFP 1 — BACKFLOW PREVENTER
BACKFLOW PREVENTER - WILKINS 3/4" LEAD-FREE REDUCED PRESSURE PRINCIPLE BACKFLOW ASSEMBLY MODEL #975XL-SAG (OR APPROVED EQUAL) WITH 3/4" AIR GAP ASSEMBLY AND WYE-STRAINER THE VALVE SHALL BE LEAD-FREE BRONZE MAIN BODY, BRONZE ACCESS COVER, SEAT RINGS AND ALL INTERNAL POLYMERS SHALL BE NSF LISTED NORYL, AND SEAT DISC ELASTOMERS SHALL BE SILICONE. THE ASSEMBLY SHALL BE RATED TO 180°F AND SUPPLIED WITH FULL PORT BALL VALVES. THE CHECK VALVE SHALL BE ACCESSIBLE FOR MAINTENANCE WITHOUT REMOVING THE PRESSURE RELIEF VALVE. AIR GAP SHALL BE INCLUDED IN INSTALLATION. ASSEMBLY MUST BE APPROVED BY FOUNDATION FOR CROSS-CONNECTION CONTROL AND HYDRAULIC RESEARCH AT THE UNIVERSITY OF SOUTHERN CALIFORNIA.

GFS 1 — GLYCOL FEED STATION
AXIOM INDUSTRIES MODEL MF300 PACKAGE GLYCOL FEED STATION (OR APPROVED EQUAL). THE PACKAGE SHALL INCLUDE 55 GALLON POLYETHYLENE TANK WITH COVER, PUMP SUCTION HOSE WITH INLET STRAINER, PRESSURE PUMP WITH THERMAL CUT-OUT, INTEGRATED CHECK-VALVE, 10 FOOT LONG CORD AND PLUG, MANUAL DIVERTER VALVE, AND OPTIONAL LOW LEVEL ALARM PANEL WITH REMOTE MONITORING DRY CONTACTS AND SELECTABLE AUDIBLE ALARM.
ELEC. 115/60/1 50 WATTS
OPERATING WEIGHT: 175 LBS.

HX 1, HX 2 — DOMESTIC WATER HEAT EXCHANGER
THERMAFLO ENGINEERING MODEL TH750V-636-DWEN DOUBLE WALL DOMESTIC WATER HEAT EXCHANGER. HEAT EXCHANGER SHALL BE SUITABLE FOR CONVERTING 13 GPM OF DOMESTIC COLD WATER AT 40°F TO 115°F WITH 40 GPM OF HEATING HOT WATER AT A SUPPLY TEMPERATURE OF 155 DEGREES. HEAT EXCHANGER TO BE CONSTRUCTED OF ASME 150 PSIG STAMPED SHELL, 316L STAINLESS STEEL SHELL MATERIAL OF CONSTRUCTION, DOUBLE WALL COPPER TUBE BUNDLE, 304 STAINLESS STEEL TUBE SHEET MATERIAL, AND MANUFACTURER'S VERTICAL STAND. HEAT EXCHANGER SHALL BE PROVIDED AND INSTALLED WITH THE FOLLOWING OPTIONS:

- MODULATING HEATING HOT WATER CONTROL VALVE WITH 1 SECOND CONTROL SEQUENCE TO MODULATE DOMESTIC HOT WATER OUTLET TEMPERATURE OF 115°F
- UL LISTED DIGITAL MICROPROCESSOR PID TEMPERATURE CONTROLLER PANEL IN A NEMA 4 RATED ENCLOSURE WITH INDICATOR OF POWER ON, HIGH LIMIT. CONTROLLER SHALL HAVE 4-20mA TEMPERATURE OUTPUT TO BUILDING CONTROL SYSTEM AND DRY CONTACTS FOR ALARMS.
- STAINLESS STEEL INTRA-TANK CIRCULATION PUMPS
- HIGH TEMPERATURE DUMP SOLENOID VALVE
- BUILDING CONTROL BACNET INTERFACE

PROVIDE AND INSTALL MANUFACTURER'S REPRESENTATIVE START UP AND PERFORMANCE TESTING

OPERATING WEIGHT: 600 LBS
ELECTRICAL: 120v/1/60Hz, FLA: 7

CP 1 — DOMESTIC HOT WATER RETURN PUMP
CIRCULATION PUMP - B&G "ECOCIRC 19-16 CIRCULATORS" MODEL #6050B2004LF DOMESTIC HOT WATER CIRCULATING PUMP WITH STAINLESS STEEL BODY AND POLYPROPYLENE IMPELLER. PUMP MOTOR TO BE ELECTRONICALLY COMMUTATED MOTOR (ECM). PUMP TO BE NSF-61 "LEAD-FREE COMPLIANT." PUMP CAPACITY SHALL BE 7.0 GPM AGAINST TOTAL HEAD PRESSURE OF 10 FEET. INSTALL COMPLETE WITH MANUFACTURER'S TIMER AND AQUASTAT TO TURN PUMP ON AT 105°F AND OFF AT 120°F. PUMP TO BE UL LISTED AND CSA APPROVED.
ELECTRICAL: 115V/1Ø/60Hz, 60 WATTS

AIR DISTRIBUTION SCHEDULE

RECTANGULAR NECK:

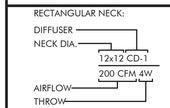

NOTE: GRILLE SHALL BE PAINTED BROWN TO MATCH EXISTING SURROUNDING WOOD

TAG	MANUF.	TYPE	FACE	FRAME	MODEL	REMARKS
CAG-1	PRICE	COMBUSTION	EGG CRATE	SURFACE	82	

PUMP SCHEDULE

UNIT GENERAL DATA																			
TYPE #	SERVICE	MANUFACTURER	MODEL	OPERATING WEIGHT (LBS)	SIZE	TYPE	FLOW (GPM)	TDH (FT)	FLUID	IMP. DIA. (IN)	MIN EFF. (%)	SUCTION (IN)	DISCH. (IN)	TRIPLE DUTY VALVE MODEL	TRIPLE DUTY VALVE SIZE (IN)	TRIPLE DUTY PRESS DROP (PSI)	SUCTION DIFFUSER MODEL	FRAME SIZE	MOTOR HP	MOTOR V/Ph/Hz	MOTOR RPM	UNIT OPTION
HWP-1	HEATING HOT WATER SYSTEM	B&G	e-80	400	2.5x2.5x9.5C	INLINE	110	50	WATER	7.375	57	2.5	2.5	3DS-2½S	2½	1.5	DC-3	184JM	5	460/3/60	1,800	A,B,C,D
HWP-2	HEATING HOT WATER SYSTEM	B&G	e-80	400	2.5x2.5x9.5C	INLINE	110	50	WATER	7.375	57	2.5	2.5	3DS-2½S	2½	1.5	DC-3	184JM	5	460/3/60	1,800	A,B,C,D

INFORMATION FOR INLINE PUMPS SCHEDULED ABOVE

GENERAL

1. DESCRIPTION: MAINTENANCE FREE, INLINE, CLOSE COUPLED, VERTICAL OR HORIZONTAL POSITION, CAST IRON CENTRIFUGAL PUMP.

PUMP

1. PUMP SHALL BE CLASS 30 CAST IRON WITH FLANGE CONNECTIONS.
2. IMPELLER SHALL BE CAST BRONZE, DYNAMICALLY BALANCED, KEYED TO THE SHAFT, AND SECURED BY A LOCKING CAPSCREW.

MOTOR

1. PREMIUM EFFICIENCY.
2. MOTOR SHALL MEET NEMA SPECIFICATIONS AND BE NON-OVERLOADING FOR ENTIRE PUMP CURVE.

OPTIONS FOR PUMPS SCHEDULED ABOVE

A. ODP PREMIUM EFFICIENCY MOTOR
B. PROVIDE WITH METRAFLEX VANEFLEX MODEL VF (OR APPROVED EQUAL) STAINLESS STEEL FLEX CONNECTOR ON SUCTION SIDE OF PUMP.
C. PROVIDE WITH METRAFLEX VANEFLEX MODEL VF90R2503 (OR APPROVED EQUAL) STAINLESS STEEL FLEX CONNECTOR WITH REDUCING ELBOW ON DISCHARGE SIDE OF ELBOW.
D. SILICONE CARBIDE SEAL.
E. MANUFACTURER'S INSIDE UNITIZED SEAL CONSISTING OF ETHYLENE-PROPYLENE COPOLYMER (EPR), SILICON CARBIDE, AND STAINLESS STEEL SUITABLE FOR USE IN GLYCOL APPLICATION.
F. MANUFACTURER'S MODEL NUMBER P2004181 VFD PUMP CONTROLLER, TO BE SHIPPED LOOSE AND FIELD INSTALLED ON WALL WHERE INDICATED.
G. PROVIDE AND INSTALL MANUFACTURER'S SHAFT GROUNDING RING
H. EXTERNAL FLUSH LINE.

INFORMATION FOR VARIABLE FREQUENCY DRIVES (VFD) PRE-PROGRAMMED BY MANUFACTURER FOR HWP-1, HWP-2, CTP-1, AND CTP-2

1. PROVIDE WITH MANUFACTURER'S INTERNAL 5% DC OUTPUT SWINGING CHOKE LINE REACTORS
2. PROVIDE AND INSTALL BACNET COMMUNICATION CARD
3. MANUFACTURER'S CIRCUIT BREAKER TYPE DISCONNECT
4. FACTORY PRE-PROGRAMMED FOR VARIABLE SENSING OPERATION
5. PROVIDE AND INSTALL GROUNDING RING ON MOTOR SHAFT
6. VFD IS TO SHIP LOOSE AND MOUNTED ON UNISTRUT STAND SEPARATELY FROM PUMP

AIR/DIRT SEPARATOR SCHEDULE

UNIT GENERAL DATA					FLOW DATA					
ADS —	SERVICE	MANUFACTURER	MODEL	OPERATING WEIGHT (LBS)	OPERATING FLOW (GPM)	MAXIMUM FLOW (GPM)	PRESS. DROP (FT WC)	INLET (IN)	OUTLET (IN)	REMARKS
1	HEATING HOT WATER	WESSELS	WVA-3	200	110	144	5	3	3	

GENERAL NOTES:

1. DESCRIPTION: ASME STAMPED, COALESCING TYPE AIR ELIMINATOR AND DIRT SEPARATOR WITH REMOVABLE BOTTOM.

DESIGN PRESSURE AND TEMPERATURE

1. AIR/DIRT SEPARATOR SHALL BE RATED FOR 125 PSIG @ 250°F

CONSTRUCTION

1. SHELL SHALL BE CONSTRUCTED OF STEEL WITH FLANGED PIPE CONNECTIONS.
2. UNIT SHALL BE PAINTED WITH ENAMEL PAINT.
3. UNIT SHALL BE CAPABLE OF HEAVIER THAN WATER, UNDISSOLVED SEDIMENT SEPARATION OF AT LEAST 30 MICRONS.
4. UNIT SHALL HAVE AN AUTOMATIC AIR VENT AT THE TOP OF THE SHELL.
5. COALESCING MEDIUM SHALL BE STAINLESS STEEL.
6. UNIT SHALL HAVE A BLOW DOWN VALVE AND SKIM VALVE.

EXPANSION TANK SCHEDULE

UNIT GENERAL DATA														
ET —	SERVICE	MANUFACTURER	MODEL	OPERATING WEIGHT (LBS)	TANK VOLUME (GALLONS)	MINIMUM ACCEPT. VOLUME (GALLONS)	OPERATING PRESSURE (PSI) MIN	OPERATING PRESSURE (PSI) MAX	OPERATING PRESSURE (PSI) ATM	OPERATING TEMP (°F) MIN	OPERATING TEMP (°F) MAX	ESTIMATED SYSTEM VOLUME (GALLONS)	REMARKS
1	HEATING HOT WATER	WESSELS	NLA 300	900	79	70	25	65	12.6	40	200	410	

GENERAL NOTES:

1. HEATING HOT WATER EXPANSION TANK TO BE REMOVABLE BLADDER TYPE, PRE-CHARGED, THERMAL EXPANSION TANK FOR HYDRONIC SYSTEMS.

CONSTRUCTION

1. TANK SHALL BE CONSTRUCTED IN ACCORDANCE WITH SECTION VII OF THE ASME BOILER AND PRESSURE VESSEL CODE AND STAMPED 150 PSI WORKING PRESSURE.

DESIGN PRESSURE AND TEMPERATURE

1. UNIT TO BE DESIGNED FOR 150 PSI WORKING PRESSURE AND 240°F WORKING TEMPERATURE.

BLADDER

1. REMOVABLE HEAVY BUTYL RUBBER BLADDER.

TANK

1. TANK SHALL HAVE A BOTTOM NPT STAINLESS STEEL SYSTEM CONNECTION AND A .302"-32 CHARGING VALVE CONNECTION (STANDARD TIRE VALVE) TO FACILITATE THE ON-SITE CHARGING OF THE TANK TO MEET SYSTEM REQUIREMENTS.

PLUMBING FIXTURE SCHEDULE

MARK	FIXTURE CONNECTION	SIZE	DESCRIPTION
ET-2	COLD WATER	3/4"	EXPANSION TANK - WESSELS MODEL TXA-50 PRE-CHARGED THERMAL EXPANSION TANK. TANK MINIMUM ACCEPTANCE VOLUME SHALL BE 12 GALLONS AND PRESET FACTORY PRESSURE SHALL BE 55 PSI. TANKS SHALL BE ASME CODE SECTION VIII, DIV. 1-U STAMPED AND HAVE A RATED MAXIMUM WORKING PRESSURE OF 150 PSI AND MAXIMUM RATED TEMPERATURE OF 240°F. TANK SHALL BE SUITABLE FOR USE ON POTABLE WATER SYSTEM. ELECTRICAL REQUIREMENTS: NONE. OPERATING WEIGHT: 100 LBS.

CR ENGINEERING
MECHANICAL ENGINEERING CONSULTANT
5434 LONGLEY LANE
RENO, NEVADA 89511
PHONE: 775.826.1919
FAX: 775.826.1918
WEB: CR-ENG.COM

THESE DRAWINGS ARE INSTRUMENTS OF SERVICE AND THE DESIGNS ARE THE EXCLUSIVE PROPERTY OF CR ENGINEERING. THIS DRAWING MAY NOT BE REPRODUCED IN ANY WAY, INCLUDING DESIGN CONCEPTS AND IDEAS, WITHOUT THE EXPRESS WRITTEN AUTHORIZATION FROM CR ENGINEERING.

SEAL:

BID DOCUMENTS

CONSULTANT:

DOUGLAS COUNTY TAHOE JUSTICE COURT
BOILER AND DOMESTIC HOT WATER
GENERATOR REPLACEMENT

MECHANICAL SCHEDULES

REVISIONS:

REV.	DESCRIPTION	DATE
-	-	-
-	-	-
-	-	-
-	-	-
-	-	-
-	-	-

DRAWN BY:	RT
DESIGNED BY:	CL
CHECKED BY:	CL
APPROVED BY:	CLR
DATE:	01/29/19
PROJECT NO:	123918

SHEET NUMBER:

M0.2

W:\2018\123918\Dwgs\123918 M0.2 MECH SCHEDULES.dwg
1/29/2019 11:22 AM By: Moises Buhajas

COMcheck Software Version 4.0.8.2
Mechanical Compliance Certificate

Project Information

Energy Code:	2012 IECC
Project Title:	Douglas County South Lake Tahoe Justice Court Boiler Replacement
Location:	Reno, Nevada
Climate Zone:	5b
Project Type:	Alteration

Construction Site:
175 US-50
South Lake Tahoe, NV 89449

Owner/Agent:
Glen Radtke
Douglas County Public Works
1120 Airport Road
Bldg. F-2
Minden, NV 89423

Designer/Contractor:
Chris Rounds, P.E.
CR Engineering
5434 Longley Ln
Reno, NV 89511

Mechanical Systems List

Quantity System Type & Description

1 B-1:
Heating: Hot Water Boiler, Capacity 1000 kBtu/h, Gas
Proposed Efficiency: 87.00 % Et, Required Efficiency: 80.00 % Et

1 B-2:
Heating: Hot Water Boiler, Capacity 1000 kBtu/h, Gas
Proposed Efficiency: 87.00 % Et, Required Efficiency: 80.00 % Et

1 WH-1:
Gas Instantaneous Water Heater, Capacity: 22 gallons, Input Rating: 1000 kBtu/h w/ Circulation Pump
Proposed Efficiency: 96.00 % Et, Required Efficiency: 80.00 % Et

1 WH-2:
Gas Instantaneous Water Heater, Capacity: 22 gallons, Input Rating: 1000 kBtu/h w/ Circulation Pump
Proposed Efficiency: 96.00 % Et, Required Efficiency: 80.00 % Et

Mechanical Compliance Statement

Compliance Statement: The proposed mechanical alteration project represented in this document is consistent with the building plans, specifications, and other calculations submitted with this permit application. The proposed mechanical systems have been designed to meet the 2012 IECC requirements in COMcheck Version 4.0.8.2 and to comply with any applicable mandatory requirements listed in the Inspection Checklist.

Name - Title _____ Signature _____ Date _____

COMcheck Software Version 4.0.8.2
Inspection Checklist

Energy Code: 2012 IECC

Requirements: 0.0% were addressed directly in the COMcheck software

Text in the "Comments/Assumptions" column is provided by the user in the COMcheck Requirements screen. For each requirement, the user certifies that a code requirement will be met and how that is documented, or that an exception is being claimed. Where compliance is itemized in a separate table, a reference to that table is provided.

Section # & Req.ID	Plan Review	Complies?	Comments/Assumptions
C103.2 [PR2][1]	Plans, specifications, and/or calculations provide all information with which compliance can be determined for the mechanical systems and equipment and document where exceptions to the standard are claimed. Load calculations per acceptable engineering standards and handbooks.	☐Complies ☐Does Not ☐Not Observable ☐Not Applicable	
C103.2 [PR3][1]	Plans, specifications, and/or calculations provide all information with which compliance can be determined for the service water heating systems and equipment and document where exceptions to the standard are claimed. Hot water system sized per manufacturer's sizing guide.	☐Complies ☐Does Not ☐Not Observable ☐Not Applicable	

Additional Comments/Assumptions:

1 High Impact (Tier 1) 2 Medium Impact (Tier 2) 3 Low Impact (Tier 3)

Section # & Req.ID	Footing / Foundation Inspection	Complies?	Comments/Assumptions
C403.2.4.5 [FO9][1]	Freeze protection and snowlice melting system sensors for future connection to controls.	☐Complies ☐Does Not ☐Not Observable ☐Not Applicable	

Additional Comments/Assumptions:

1 High Impact (Tier 1) 2 Medium Impact (Tier 2) 3 Low Impact (Tier 3)

Section # & Req.ID	Plumbing Rough-In Inspection	Complies?	Comments/Assumptions
C404.3 [PL5][1]	Temperature controls installed on service water heating systems (110 F for dwelling units and lavatories in public restrooms and 90 F for other occupancies.)	☐Complies ☐Does Not ☐Not Observable ☐Not Applicable	
C404.3 [PL5][1]	Temperature controls installed on service water heating systems (110 F for dwelling units and lavatories in public restrooms and 90 F for other occupancies.)	☐Complies ☐Does Not ☐Not Observable ☐Not Applicable	
C404.4 [PL3][1]	Automatic time switches installed to automatically switch off the recirculating hot-water system or heat trace.	☐Complies ☐Does Not ☐Not Observable ☐Not Applicable	
C404.4 [PL3][1]	Automatic time switches installed to automatically switch off the recirculating hot-water system or heat trace.	☐Complies ☐Does Not ☐Not Observable ☐Not Applicable	

Additional Comments/Assumptions:

1 High Impact (Tier 1) 2 Medium Impact (Tier 2) 3 Low Impact (Tier 3)

Section # & Req.ID	Mechanical Rough-In Inspection	Complies?	Comments/Assumptions
C403.2.3 [ME55][1]	HVAC equipment efficiency verified.	☐Complies ☐Does Not ☐Not Observable ☐Not Applicable	*See the Mechanical Systems list for values.*
C403.2.5.1 [ME59][1]	Demand control ventilation provided for spaces >500 sq.ft. and >25 people/1000 sq.ft. occupant density and served by systems with air side economizer, auto modulating outside air damper control, or design airflow >3,000 cfm.	☐Complies ☐Does Not ☐Not Observable ☐Not Applicable	
C403.2.7 [ME60][1]	HVAC ducts and plenums insulated. Where ducts or plenums are installed in or under a slab, verification may need to occur during Foundation Inspection.	☐Complies ☐Does Not ☐Not Observable ☐Not Applicable	
C403.2.8 [ME61][1]	HVAC piping insulation thickness. Where piping is installed in or under a slab, verification may need to occur during Foundation Inspection.	☐Complies ☐Does Not ☐Not Observable ☐Not Applicable	
C403.2.8 [ME61][1]	HVAC piping insulation thickness. Where piping is installed in or under a slab, verification may need to occur during Foundation Inspection.	☐Complies ☐Does Not ☐Not Observable ☐Not Applicable	
C403.2.8.1 [ME7][1]	Piping Insulation exposed to weather is protected from damage (due to sun, moisture, wind, etc.).	☐Complies ☐Does Not ☐Not Observable ☐Not Applicable	
C403.2.8 [ME41][1]	Thermally ineffective panel surfaces of sensible heating panels have insulation >= R-3.5.	☐Complies ☐Does Not ☐Not Observable ☐Not Applicable	
C403.2.7 [ME10][1]	Ducts and plenums sealed based on static pressure and location.	☐Complies ☐Does Not ☐Not Observable ☐Not Applicable	
C408.2.2.1 [ME53][1]	Air outlets and zone terminal devices have means for air balancing.	☐Complies ☐Does Not ☐Not Observable ☐Not Applicable	
C403.4.2 [ME66][1]	VAV fan motors >=7.5 hp to be driven by variable speed drive, have a vane-axial fan with variable pitch blades, or have controls to limit fan motor demand.	☐Complies ☐Does Not ☐Not Observable ☐Not Applicable	
C403.4.2 [ME66][1]	VAV fan motors >=7.5 hp to be driven by variable speed drive, have a vane-axial fan with variable pitch blades, or have controls to limit fan motor demand.	☐Complies ☐Does Not ☐Not Observable ☐Not Applicable	
C403.4.2 [ME66][1]	VAV fan motors >=7.5 hp to be driven by variable speed drive, have a vane-axial fan with variable pitch blades, or have controls to limit fan motor demand.	☐Complies ☐Does Not ☐Not Observable ☐Not Applicable	

1 High Impact (Tier 1) 2 Medium Impact (Tier 2) 3 Low Impact (Tier 3)

Section # & Req.ID	Mechanical Rough-In Inspection	Complies?	Comments/Assumptions
C403.2.4.2 [FI38][1]	VAV fan motors >=7.5 hp to be driven by variable speed drive, have a vane-axial fan with variable pitch blades, or have controls to limit fan motor demand.	☐Complies ☐Does Not ☐Not Observable ☐Not Applicable	
C403.4.3.4 [ME68][1]	Hydronic systems greater than 300,000 Btu/h designed for variable fluid flow.	☐Complies ☐Does Not ☐Not Observable ☐Not Applicable	
C403.4.3.4 [ME68][1]	Hydronic systems greater than 300,000 Btu/h designed for variable fluid flow.	☐Complies ☐Does Not ☐Not Observable ☐Not Applicable	
C403.4.3.4 [ME69][1]	Temperature reset by representative building loads in pumping systems for chiller and boiler systems >300,000 Btu/h.	☐Complies ☐Does Not ☐Not Observable ☐Not Applicable	
C403.4.3.4 [ME69][1]	Temperature reset by representative building loads in pumping systems for chiller and boiler systems >300,000 Btu/h.	☐Complies ☐Does Not ☐Not Observable ☐Not Applicable	
C403.2.6 [ME57][1]	Exhaust air energy recovery on systems meeting Table C403.7.6	☐Complies ☐Does Not ☐Not Observable ☐Not Applicable	
C403.2.11 [ME71][1]	Unenclosed spaces that are heated use only radiant heat.	☐Complies ☐Does Not ☐Not Observable ☐Not Applicable	

Additional Comments/Assumptions:

1 High Impact (Tier 1) 2 Medium Impact (Tier 2) 3 Low Impact (Tier 3)

Section # & Req.ID	Final Inspection	Complies?	Comments/Assumptions
C404.6 [FI12][1]	Thermostatic controls have a 5 °F deadband.	☐Complies ☐Does Not ☐Not Observable ☐Not Applicable	
C403.2.4.2 [FI20][1]	Temperature controls have setpoint overlap restrictions.	☐Complies ☐Does Not ☐Not Observable ☐Not Applicable	
C403.2.4.3 [FI39][1]	Each zone equipped with setback controls using automatic time clock or programmable control system.	☐Complies ☐Does Not ☐Not Observable ☐Not Applicable	
C403.2.4.3 [FI40][1]	Automatic Controls: Setback to 55°F (heat) and 85°F (cool); 7-day clock, 2-hour occupant override, 10-hour backup	☐Complies ☐Does Not ☐Not Observable ☐Not Applicable	
C408.2.5.1 [FI7][1]	Furnished HVAC as-built drawings submitted within 90 days of system acceptance.	☐Complies ☐Does Not ☐Not Observable ☐Not Applicable	
C303.3, C408.2.5.3 [FI8][1]	Furnished O&M manuals for HVAC systems within 90 days of system acceptance.	☐Complies ☐Does Not ☐Not Observable ☐Not Applicable	
C408.2.5.3 [FI43][1]	An air and/or hydronic system balancing report is provided for HVAC systems.	☐Complies ☐Does Not ☐Not Observable ☐Not Applicable	
C408.2.3.2 [FI10][1]	HVAC control systems have been tested to ensure proper operation, calibration and adjustment of controls.	☐Complies ☐Does Not ☐Not Observable ☐Not Applicable	
C404.3 [FI11][1]	Public lavatory faucet water temperature <=110°F.	☐Complies ☐Does Not ☐Not Observable ☐Not Applicable	
C404.3 [FI11][1]	Public lavatory faucet water temperature <=110°F.	☐Complies ☐Does Not ☐Not Observable ☐Not Applicable	
C404.5 [FI25][1]	All piping in circulating system insulated	☐Complies ☐Does Not ☐Not Observable ☐Not Applicable	
C404.5 [FI25][1]	All piping in circulating system insulated	☐Complies ☐Does Not ☐Not Observable ☐Not Applicable	
C404.6 [FI12][1]	Controls are installed that limit the operation of a recirculation pump installed to maintain temperature of a storage tank.	☐Complies ☐Does Not ☐Not Observable ☐Not Applicable	

1 High Impact (Tier 1) 2 Medium Impact (Tier 2) 3 Low Impact (Tier 3)

Section # & Req.ID	Final Inspection	Complies?	Comments/Assumptions
C404.6 [FI12][1]	Controls are installed that limit the operation of a recirculation pump installed to maintain temperature of a storage tank.	☐Complies ☐Does Not ☐Not Observable ☐Not Applicable	
C403.2.2 [FI27][1]	HVAC systems and equipment capacity does not exceed calculated loads.	☐Complies ☐Does Not ☐Not Observable ☐Not Applicable	
C408.2.1 [FI28][1]	Commissioning plan developed by registered design professional or approved agency.	☐Complies ☐Does Not ☐Not Observable ☐Not Applicable	
C408.2.4 [FI29][1]	Preliminary commissioning report completed and certified by registered design professional or approved agency.	☐Complies ☐Does Not ☐Not Observable ☐Not Applicable	
C408.2.5.4 [FI30][1]	Final commissioning report due to building owner within 90 days of receipt of certificate of occupancy.	☐Complies ☐Does Not ☐Not Observable ☐Not Applicable	
C408.2.3.1 [FI31][1]	HVAC equipment has been tested to ensure proper operation.	☐Complies ☐Does Not ☐Not Observable ☐Not Applicable	

Additional Comments/Assumptions:

1 High Impact (Tier 1) 2 Medium Impact (Tier 2) 3 Low Impact (Tier 3)

1 High Impact (Tier 1) 2 Medium Impact (Tier 2) 3 Low Impact (Tier 3)

CR ENGINEERING
MECHANICAL ENGINEERING CONSULTANT

5434 LONGLEY LANE
RENO, NEVADA 89511
PHONE: 775.826.1919
FAX: 775.826.1918
WEB: CR-ENG.COM

THESE DRAWINGS ARE INSTRUMENTS OF SERVICE AND THE DESIGNS ARE THE EXCLUSIVE PROPERTY OF CR ENGINEERING. THIS DRAWING MAY NOT BE REPRODUCED IN ANY WAY, INCLUDING DESIGN CONCEPTS AND IDEAS, WITHOUT THE EXPRESS WRITTEN AUTHORIZATION FROM CR ENGINEERING.

SEAL:

PROFESSIONAL ENGINEER STATE OF NEVADA
CHRISTOPHER L. ROUNDS
Exp: 12-31-19
MECHANICAL
No. 13968
1/29/19

BID DOCUMENTS

CONSULTANT:

DOUGLAS COUNTY TAHOE JUSTICE COURT BOILER AND DOMESTIC HOT WATER GENERATOR REPLACEMENT

MECHANICAL COMPLIANCE CERTIFICATE

REVISIONS:

REV.	DESCRIPTION	DATE
-	-	-
-	-	-
-	-	-
-	-	-
-	-	-
-	-	-

DRAWN BY:	RT
DESIGNED BY:	CL
CHECKED BY:	CL
APPROVED BY:	CLR
DATE:	01/29/19
PROJECT NO:	123918

SHEET NUMBER:

M0.3

V:\2018\123918\dwgs\123918 M0.3 MECH CHECK.dwg
1/29/2019 11:22 AM By: Moises Barajas

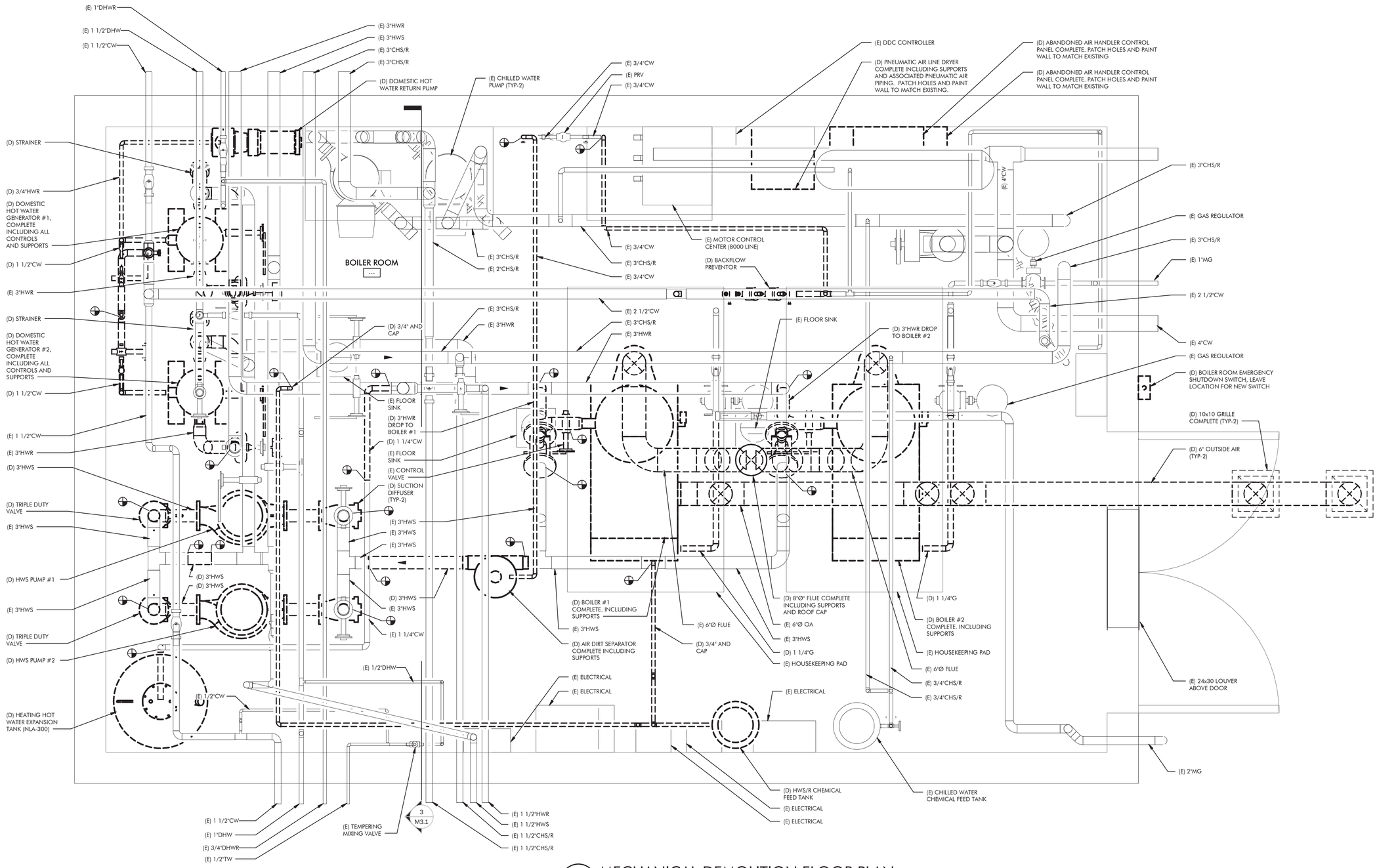

A
M1.1
MECHANICAL DEMOLITION FLOOR PLAN
SCALE: 1" = 1'-0"

PLOT DATE:

ENGINEERING
MECHANICAL ENGINEERING CONSULTANT

5434 LONGLEY LANE
RENO, NEVADA 89511
PHONE: 775.826.1919
FAX: 775.826.1918
WEB: CR-ENG.COM

THESE DRAWINGS ARE INSTRUMENTS OF SERVICE AND THE DESIGNS ARE THE EXCLUSIVE PROPERTY OF CR ENGINEERING. THIS DRAWING MAY NOT BE REPRODUCED IN ANY WAY, INCLUDING DESIGN CONCEPTS AND IDEAS, WITHOUT THE EXPRESS WRITTEN AUTHORIZATION FROM CR ENGINEERING.

SEAL:

PROFESSIONAL ENGINEER STATE OF NEVADA
CHRISTOPHER L. ROUNDS
Exp: 12-31-19
MECHANICAL
No. 13968
1/29/19

BID DOCUMENTS

CONSULTANT:

DOUGLAS COUNTY TAHOE JUSTICE COURT
BOILER AND DOMESTIC HOT WATER GENERATOR REPLACEMENT

MECHANICAL DEMOLITION FLOOR PLAN

REVISIONS:

REV.	DESCRIPTION	DATE
-	-	-
-	-	-
-	-	-
-	-	-
-	-	-
-	-	-

DRAWN BY:	MB
DESIGNED BY:	CL
CHECKED BY:	CL
APPROVED BY:	CLR
DATE:	01/29/19
PROJECT NO:	123918

SHEET NUMBER:

M1.1

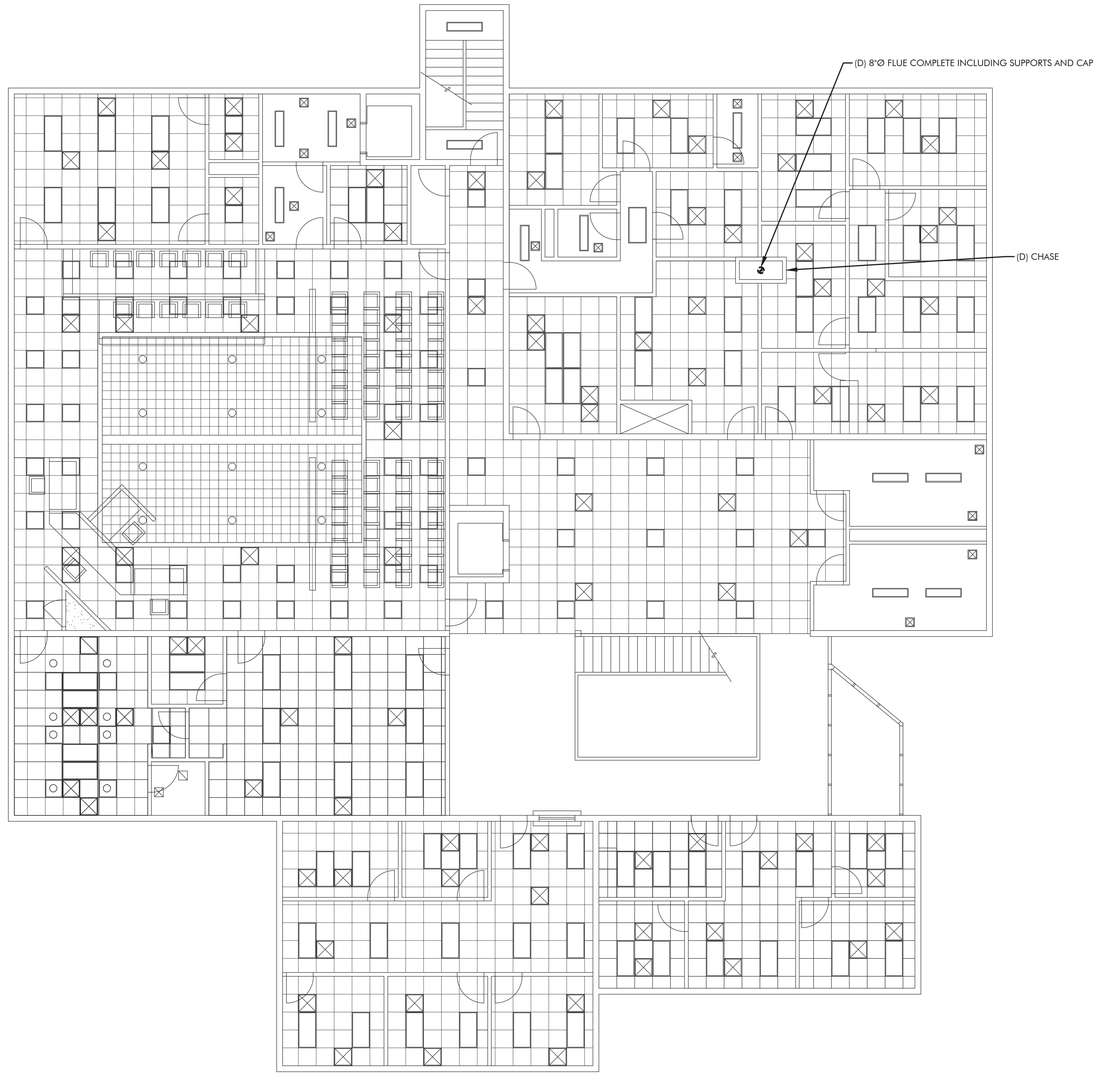

MECHANICAL DEMOLITION 2ND FLOOR PLAN

SCALE: 1/2"=1'-0"

A
M1.2

W:\2018\123918\dwgs\123918 M1.2 MECH DEMO 2ND FLR.dwg
1/29/2019 11:22 AM By: Moises Burgos

ENGINEERING
MECHANICAL ENGINEERING CONSULTANT

5434 LONGLEY LANE
RENO, NEVADA 89511
PHONE: 775.826.1919
FAX: 775.826.1918
WEB: CR-ENG.COM

THESE DRAWINGS ARE INSTRUMENTS OF SERVICE AND THE DESIGNS ARE THE EXCLUSIVE PROPERTY OF CR ENGINEERING. THIS DRAWING MAY NOT BE REPRODUCED IN ANY WAY, INCLUDING DESIGN CONCEPTS AND IDEAS, WITHOUT THE EXPRESS WRITTEN AUTHORIZATION FROM CR ENGINEERING.

SEAL:

PROFESSIONAL ENGINEER STATE OF NEVADA
CHRISTOPHER L. ROUNDS
Exp: 12-31-19
MECHANICAL
No. 13968
1/29/19

BID DOCUMENTS

CONSULTANT:

DOUGLAS COUNTY TAHOE JUSTICE COURT
BOILER AND DOMESTIC HOT WATER
GENERATOR REPLACEMENT

MECHANICAL
DEMOLITION 2ND FLOOR
PLAN

REVISIONS:

REV.	DESCRIPTION	DATE
-	-	-
-	-	-
-	-	-
-	-	-
-	-	-
-	-	-

DRAWN BY:	RT
DESIGNED BY:	CL
CHECKED BY:	CL
APPROVED BY:	CLR
DATE:	01/29/19
PROJECT NO:	123918

SHEET NUMBER:

M1.2

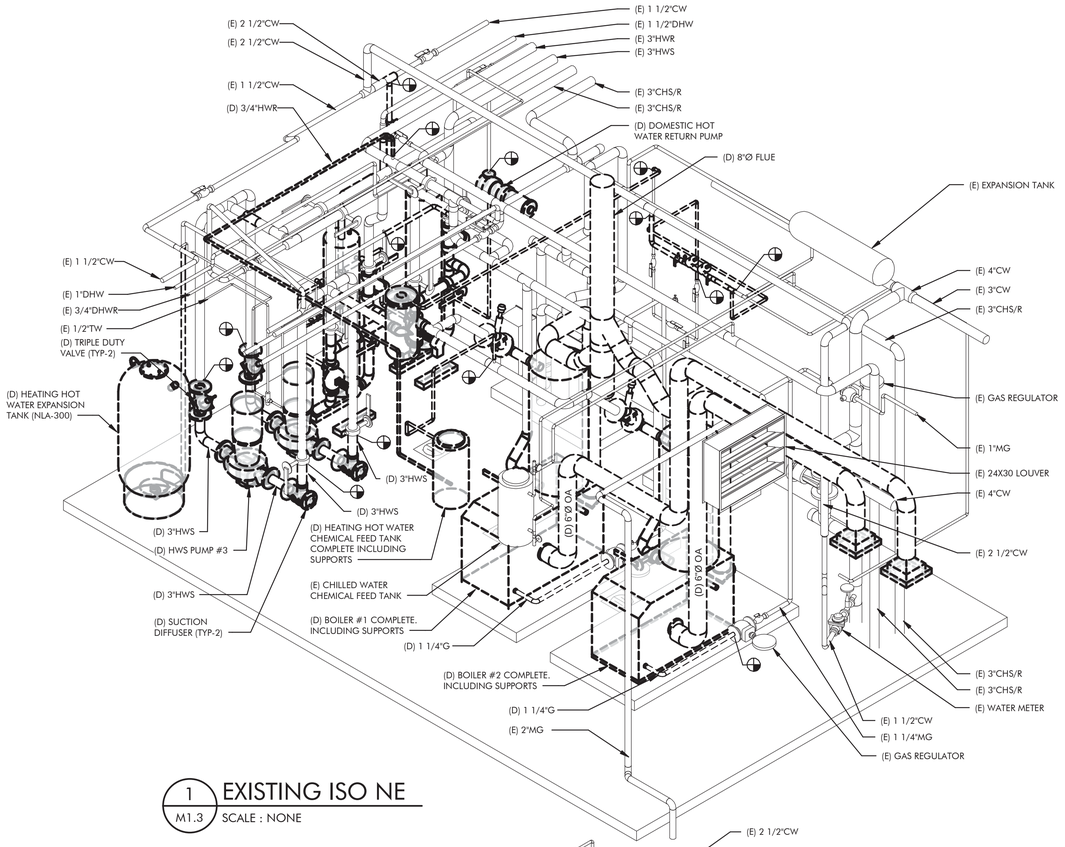

1 M1.3 EXISTING ISO NE
SCALE : NONE

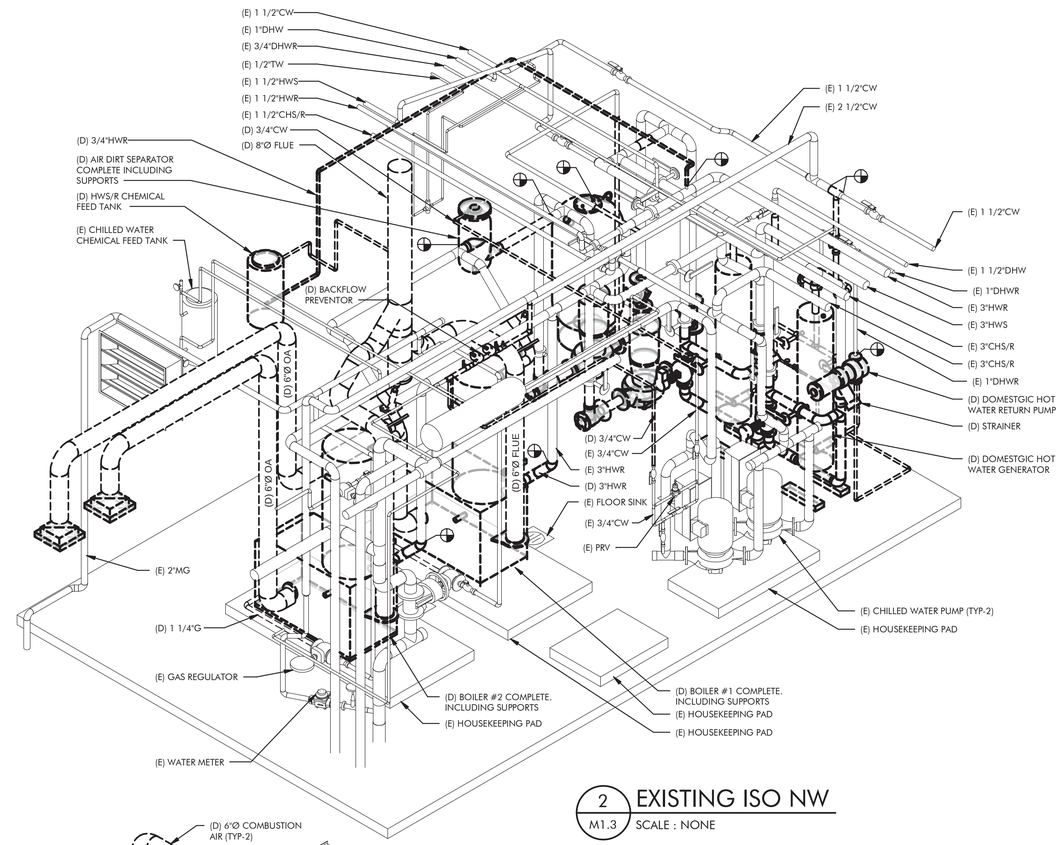

2 M1.3 EXISTING ISO NW
SCALE : NONE

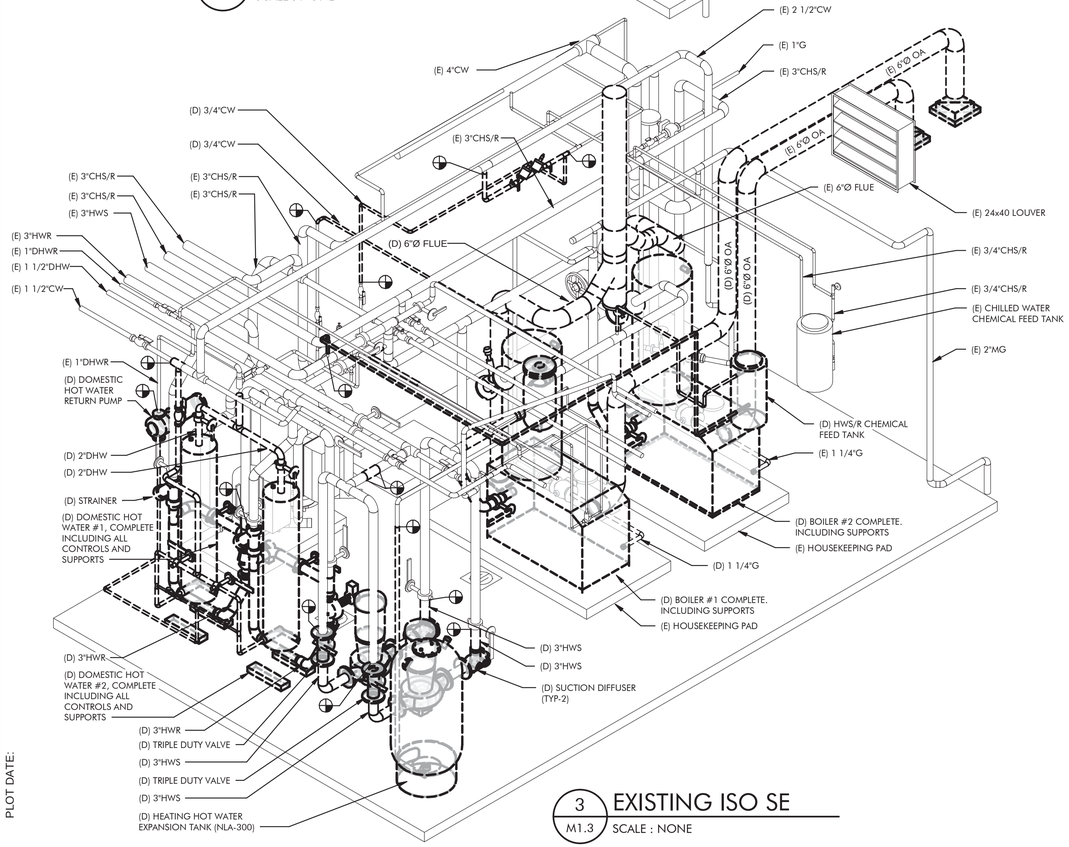

3 M1.3 EXISTING ISO SE
SCALE : NONE

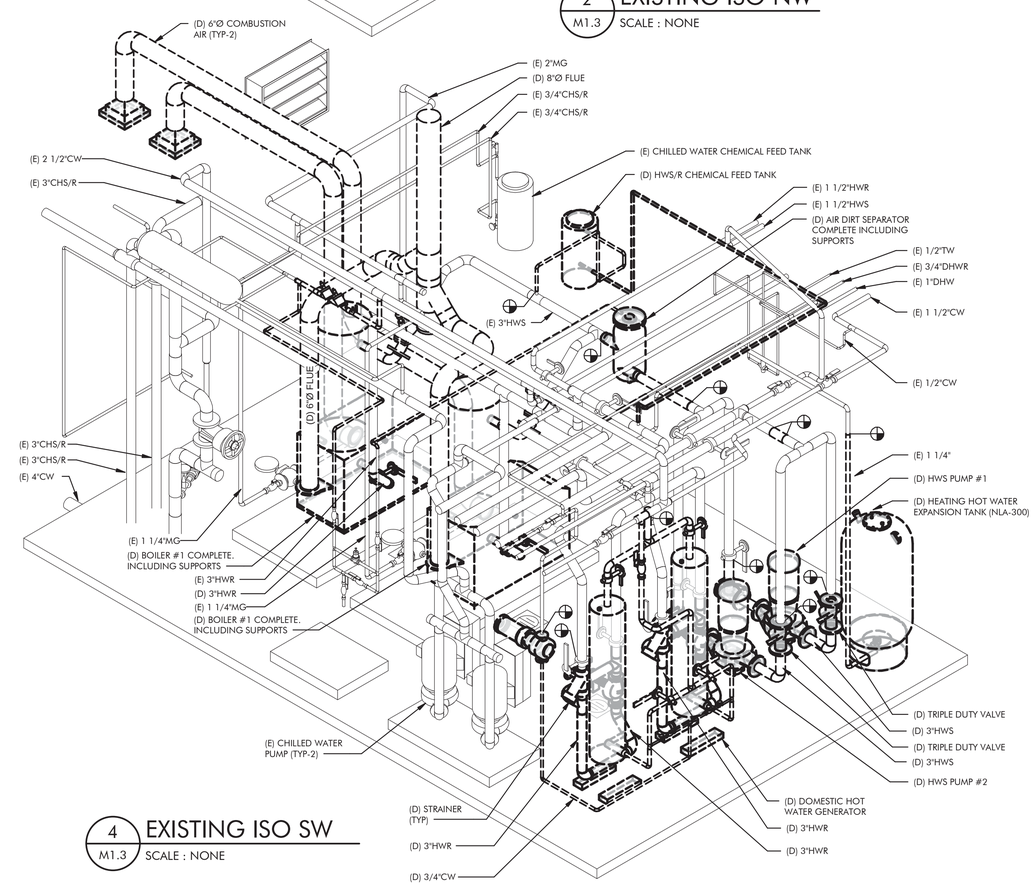

4 M1.3 EXISTING ISO SW
SCALE : NONE

PLOT DATE:

ENGINEERING
MECHANICAL ENGINEERING CONSULTANT
5434 LONGLEY LANE
RENO, NEVADA 89511
PHONE: 775.826.1919
FAX: 775.826.1918
WEB: CR-ENG.COM

THESE DRAWINGS ARE INSTRUMENTS OF SERVICE AND THE DESIGNS ARE THE EXCLUSIVE PROPERTY OF CR ENGINEERING. THIS DRAWING MAY NOT BE REPRODUCED IN ANY WAY, INCLUDING DESIGN CONCEPTS AND IDEAS, WITHOUT THE EXPRESS WRITTEN AUTHORIZATION FROM CR ENGINEERING.

SEAL:

PROFESSIONAL ENGINEER - STATE OF NEVADA
CHRISTOPHER L. ROUNDS
Exp: 12-31-19
MECHANICAL
No. 13968
1/29/19

BID DOCUMENTS

CONSULTANT:

DOUGLAS COUNTY TAHOE JUSTICE COURT
BOILER AND DOMESTIC HOT WATER GENERATOR REPLACEMENT

MECHANICAL DEMOLITION ISOMETRICS

REVISIONS:

REV.	DESCRIPTION	DATE
-	-	-
-	-	-
-	-	-
-	-	-
-	-	-
-	-	-

DRAWN BY:	MB
DESIGNED BY:	CL
CHECKED BY:	CL
APPROVED BY:	CLR
DATE:	01/29/19
PROJECT NO:	123918

SHEET NUMBER:

M1.3

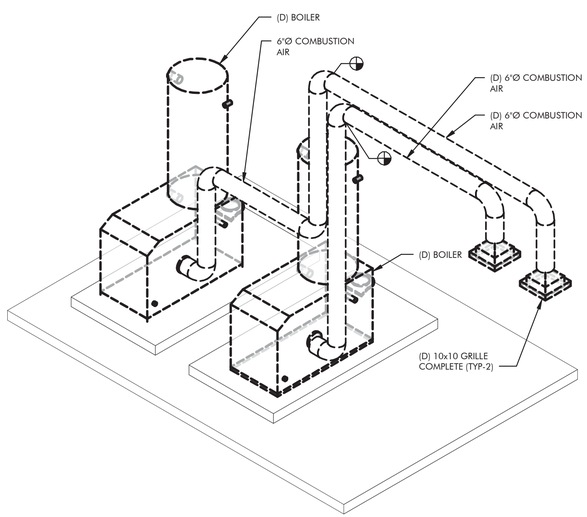

1 M1.4 COMBUSTION AIR DEMOLITION ISOMETRIC
SCALE : NONE

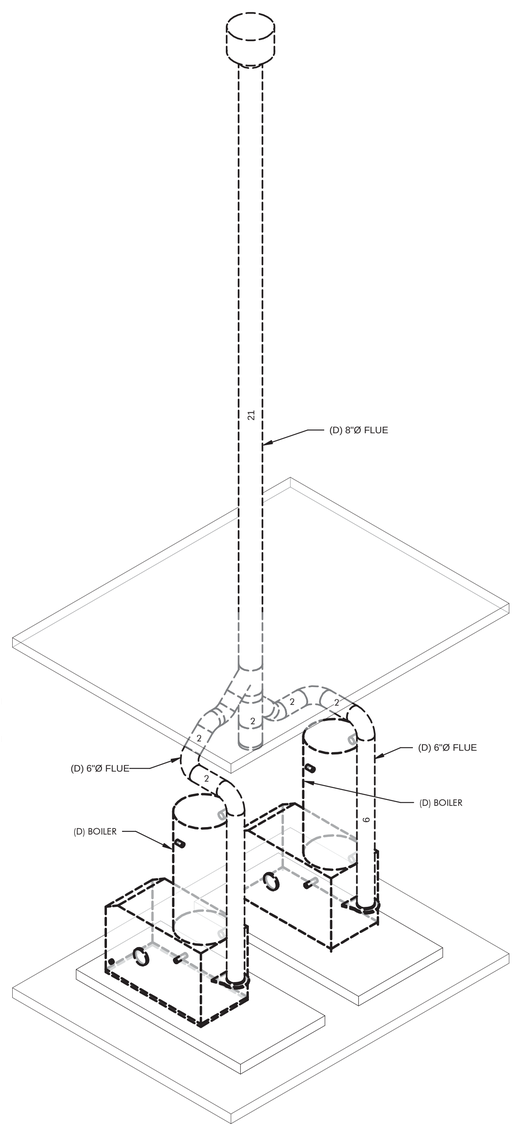

2 M1.4 FLUE DEMOLITION ISOMETRIC
SCALE : NONE

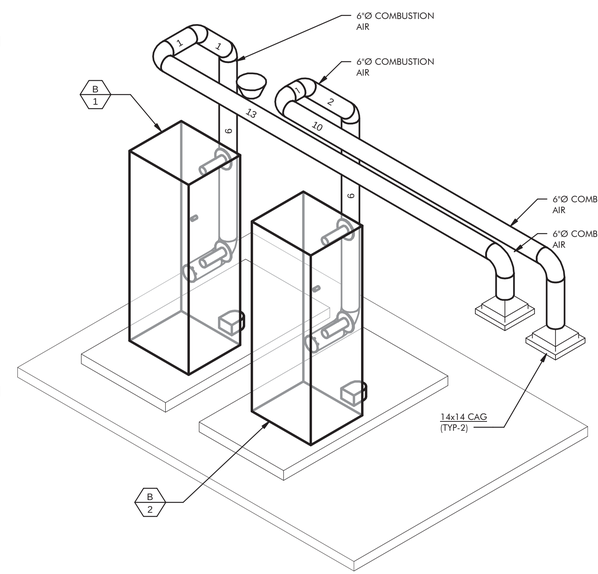

3 M1.4 NEW COMBUSTION AIR ISOMETRIC
SCALE : NONE

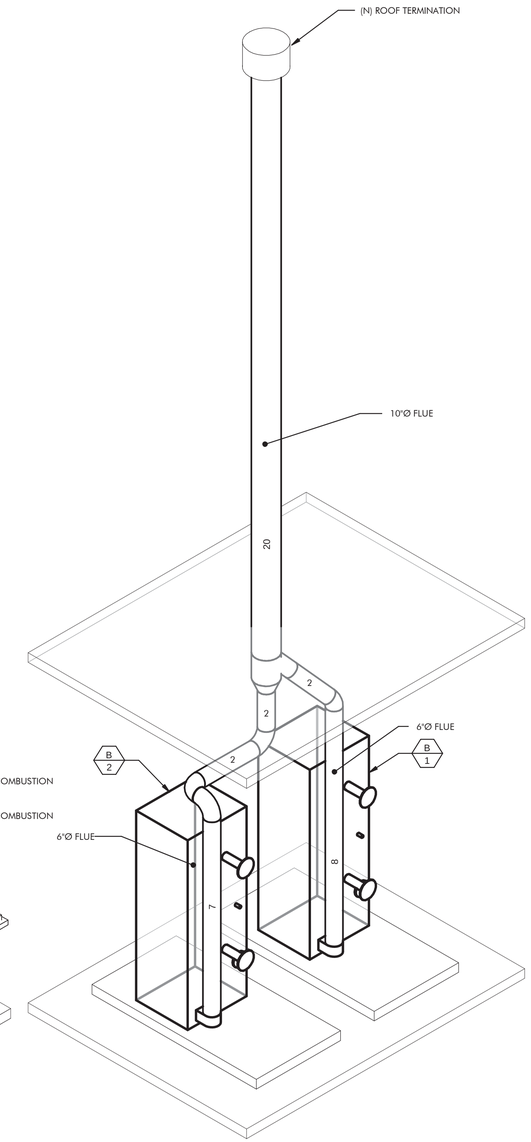

4 M1.4 NEW FLUE ISOMETRIC
SCALE : NONE

ENGINEERING
MECHANICAL ENGINEERING CONSULTANT
5434 LONGLEY LANE
RENO, NEVADA 89511
PHONE: 775.826.1919
FAX: 775.826.1918
WEB: CR-ENG.COM

THESE DRAWINGS ARE INSTRUMENTS OF SERVICE AND THE DESIGNS ARE THE EXCLUSIVE PROPERTY OF CR ENGINEERING. THIS DRAWING MAY NOT BE REPRODUCED IN ANY WAY, INCLUDING DESIGN CONCEPTS AND IDEAS, WITHOUT THE EXPRESS WRITTEN AUTHORIZATION FROM CR ENGINEERING.

SEAL:

PROFESSIONAL ENGINEER STATE OF NEVADA
CHRISTOPHER L. ROUNDS
Exp: 12-31-19
MECHANICAL
N.O. 13968
1/29/19

BID DOCUMENTS

CONSULTANT:

DOUGLAS COUNTY TAHOE JUSTICE COURT
BOILER AND DOMESTIC HOT WATER GENERATOR REPLACEMENT

MECHANICAL DUCT LENGTH ISOMETRICS

REVISIONS:

REV.	DESCRIPTION	DATE
-	-	-
-	-	-
-	-	-
-	-	-
-	-	-
-	-	-

DRAWN BY:	MB
DESIGNED BY:	CL
CHECKED BY:	CL
APPROVED BY:	CLR
DATE:	01/29/19
PROJECT NO:	123918

SHEET NUMBER:

M1.4

PLOT DATE:

PROJECT NOTE

1. CONTRACTOR TO PROVIDE A TEMPORARY 50 GALLON ELECTRIC WATER HEATER, 460V/3Ø/60, 6kw FOR TEMPORARY DOMESTIC HOT WATER, SEE ELECTRIC DRAWINGS.

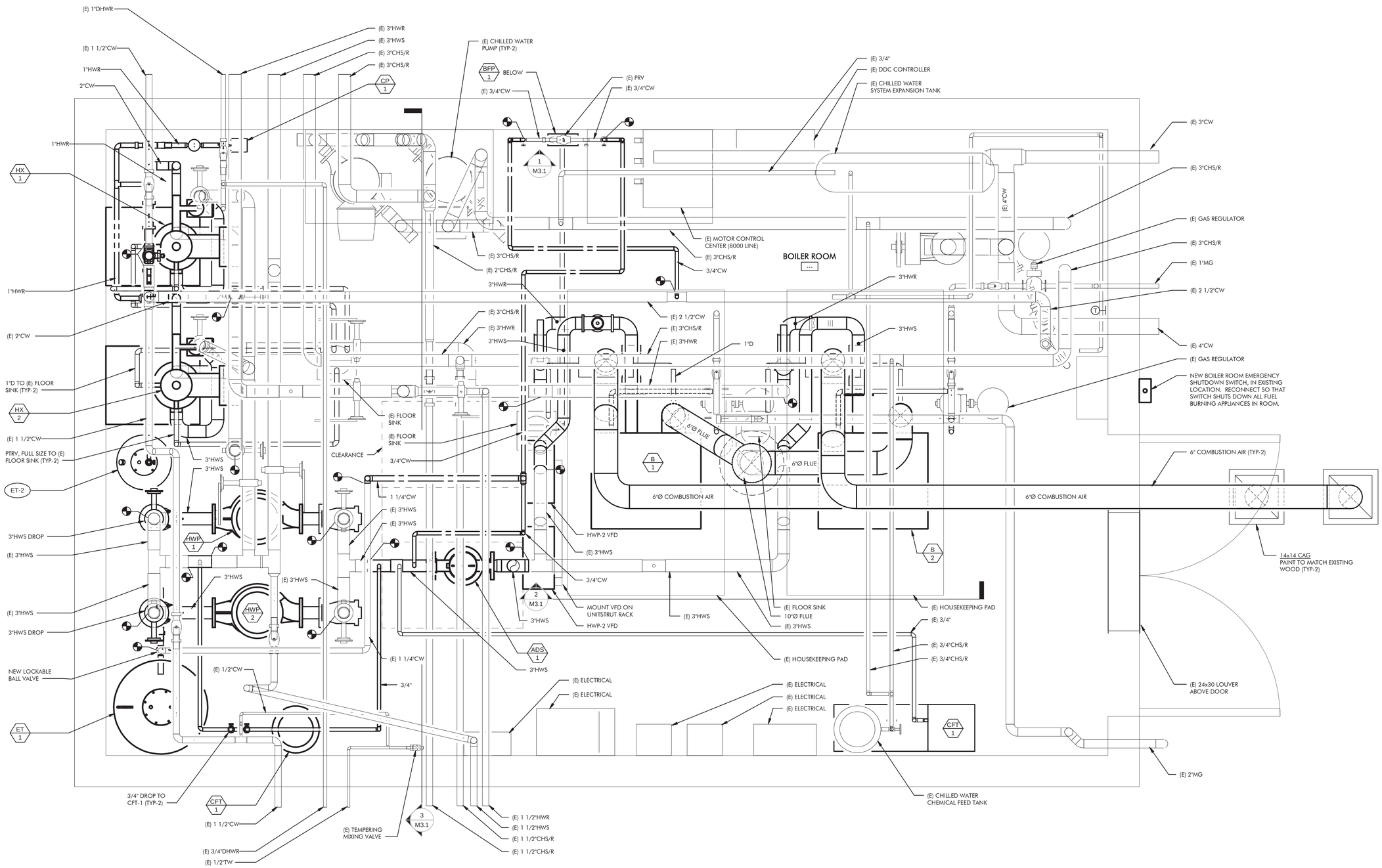

A M2.1 MECHANICAL FLOOR PLAN
SCALE: 1" = 1'-0"

PLOT DATE:

CR ENGINEERING
MECHANICAL ENGINEERING CONSULTANT
5434 LONGLEY LANE
RENO, NEVADA 89511
PHONE: 775.826.1919
FAX: 775.826.1918
WEB: CR-ENG.COM

THESE DRAWINGS ARE INSTRUMENTS OF SERVICE AND THE DESIGNS ARE THE EXCLUSIVE PROPERTY OF CR ENGINEERING. THIS DRAWING MAY NOT BE REPRODUCED IN ANY WAY, INCLUDING DESIGN CONCEPTS AND IDEAS, WITHOUT THE EXPRESS WRITTEN AUTHORIZATION FROM CR ENGINEERING.

SEAL:

PROFESSIONAL ENGINEER STATE OF NEVADA
CHRISTOPHER L. ROUNDS
Exp: 12-31-19
MECHANICAL
No. 13968
1/29/19

BID DOCUMENTS

CONSULTANT:

DOUGLAS COUNTY TAHOE JUSTICE COURT
BOILER AND DOMESTIC HOT WATER GENERATOR REPLACEMENT

MECHANICAL FLOOR PLAN

REVISIONS:

REV.	DESCRIPTION	DATE
-	-	-
-	-	-
-	-	-
-	-	-
-	-	-
-	-	-

DRAWN BY:	MB
DESIGNED BY:	CL
CHECKED BY:	CL
APPROVED BY:	CLR
DATE:	01/29/19
PROJECT NO:	123918

SHEET NUMBER:

M2.1

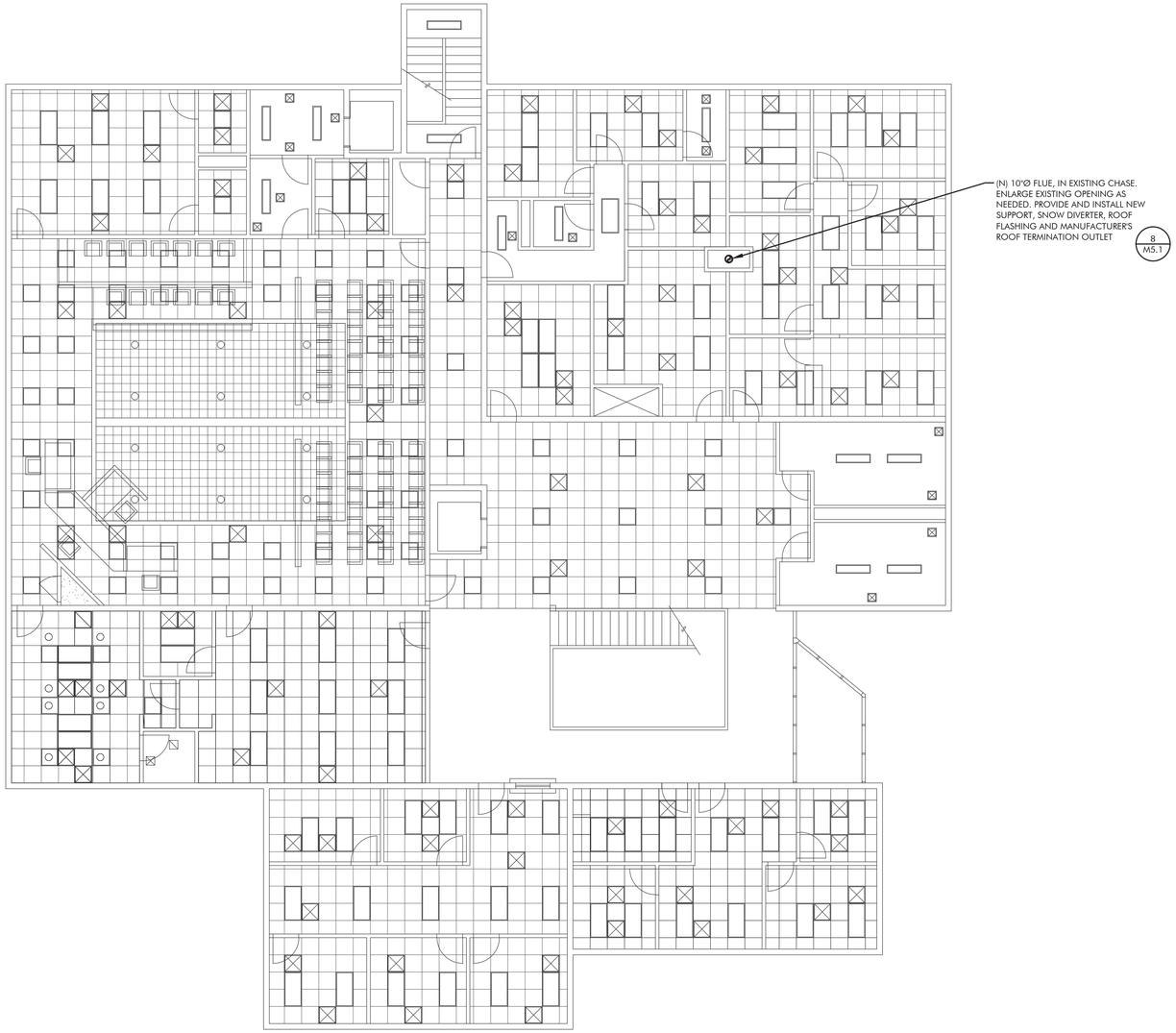

MECHANICAL 2ND FLOOR PLAN

SCALE: 1/8"=1'-0"

A
M2.2

W:\2018\123918\Dwgs\123918 M2.2 MECH 2ND FLR.dwg
1/29/2019 11:22 AM By: Moises Bonjoch

ENGINEERING
MECHANICAL ENGINEERING CONSULTANT

5434 LONGLEY LANE
RENO, NEVADA 89511
PHONE: 775.826.1919
FAX: 775.826.1918
WEB: CR-ENG.COM

THESE DRAWINGS ARE INSTRUMENTS OF SERVICE AND THE DESIGNS ARE THE EXCLUSIVE PROPERTY OF CR ENGINEERING. THIS DRAWING MAY NOT BE REPRODUCED IN ANY WAY, INCLUDING DESIGN CONCEPTS AND IDEAS, WITHOUT THE EXPRESS WRITTEN AUTHORIZATION FROM CR ENGINEERING.

SEAL:

PROFESSIONAL ENGINEER STATE OF NEVADA
CHRISTOPHER L. ROUNDS
Exp: 12-31-19
MECHANICAL
No. 13968
1/29/19

BID DOCUMENTS

CONSULTANT:

DOUGLAS COUNTY TAHOE JUSTICE COURT
BOILER AND DOMESTIC HOT WATER
GENERATOR REPLACEMENT

MECHANICAL 2ND FLOOR
PLAN

REVISIONS:

REV.	DESCRIPTION	DATE
-	-	-
-	-	-
-	-	-
-	-	-
-	-	-
-	-	-

DRAWN BY:	RT
DESIGNED BY:	CL
CHECKED BY:	CL
APPROVED BY:	CLR
DATE:	01/29/19
PROJECT NO:	123918

SHEET NUMBER:

M2.2

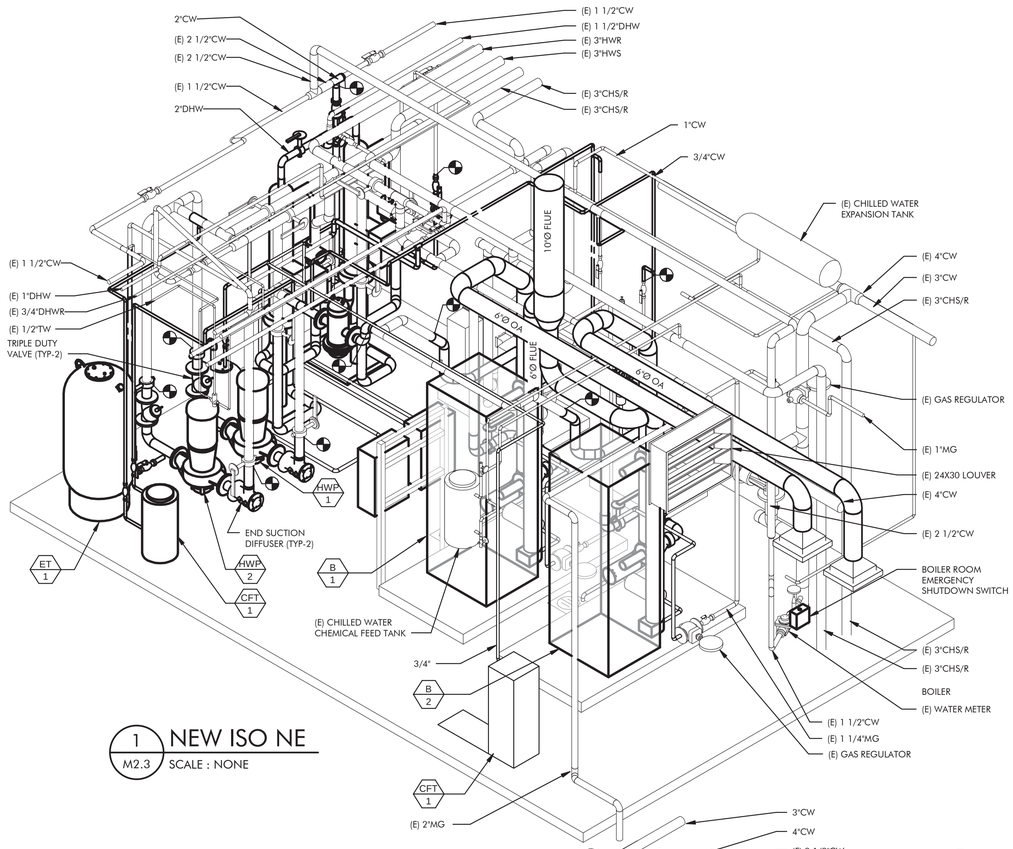

1 M2.3 NEW ISO NE
SCALE : NONE

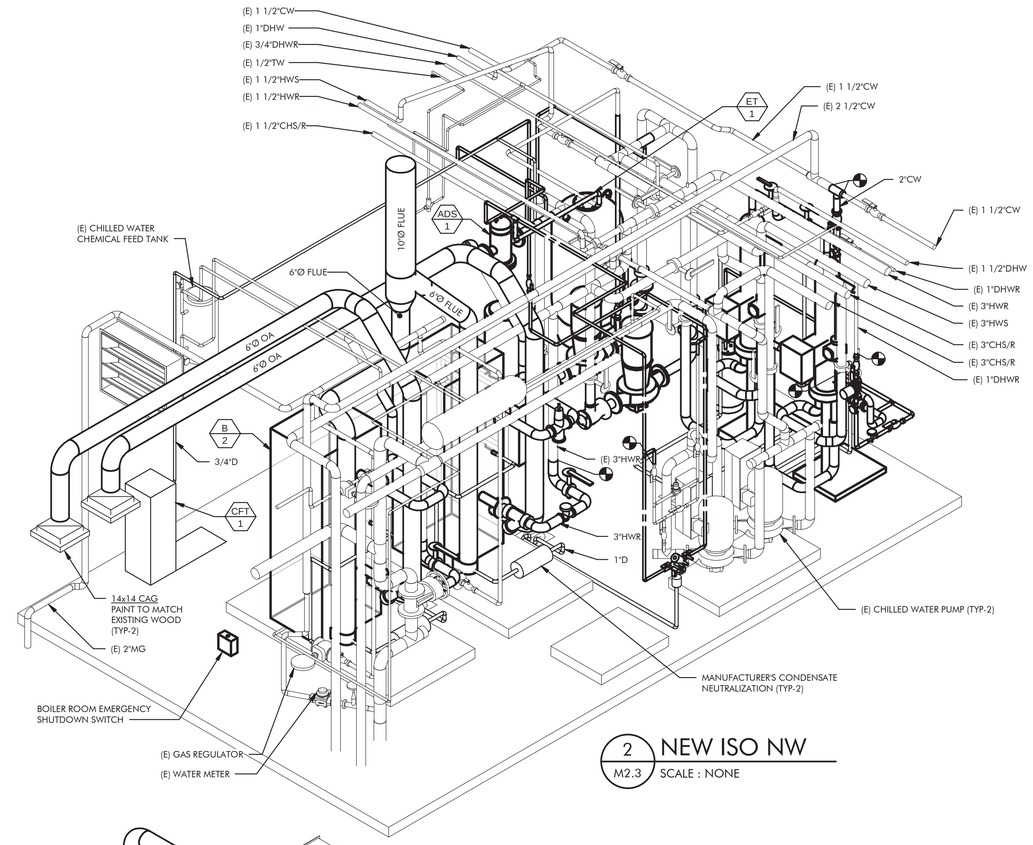

2 M2.3 NEW ISO NW
SCALE : NONE

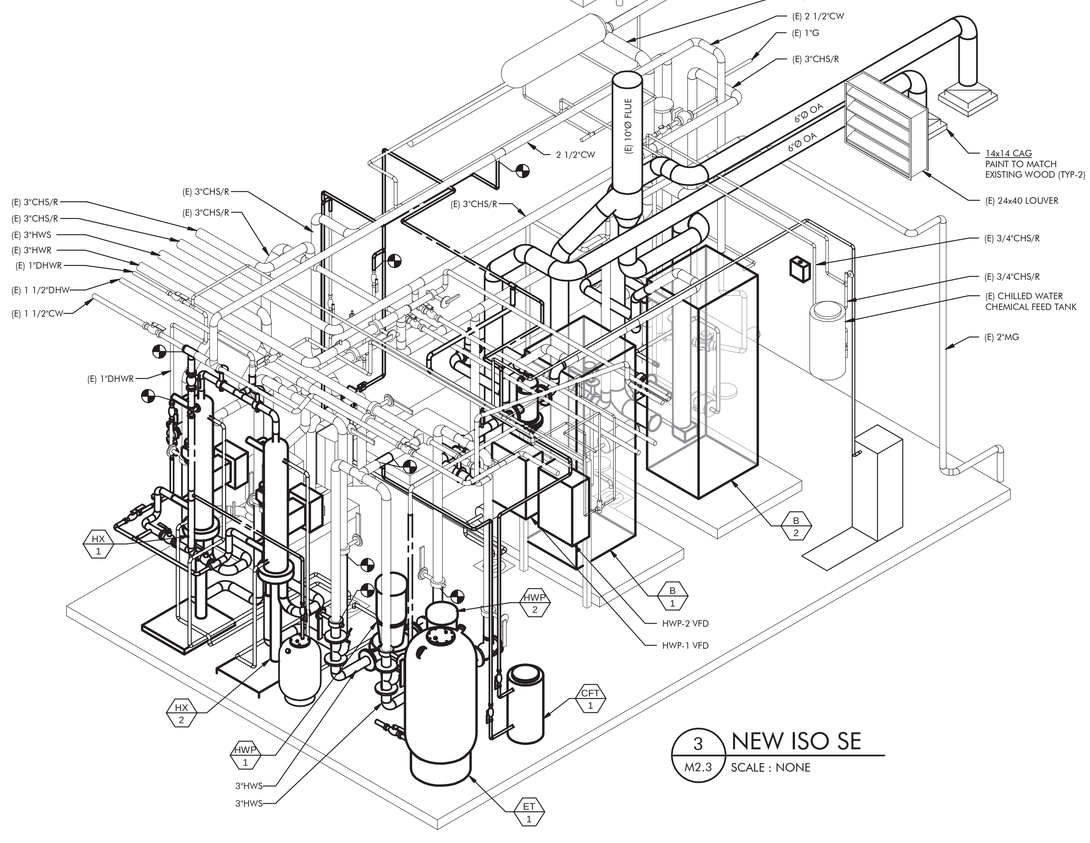

3 M2.3 NEW ISO SE
SCALE : NONE

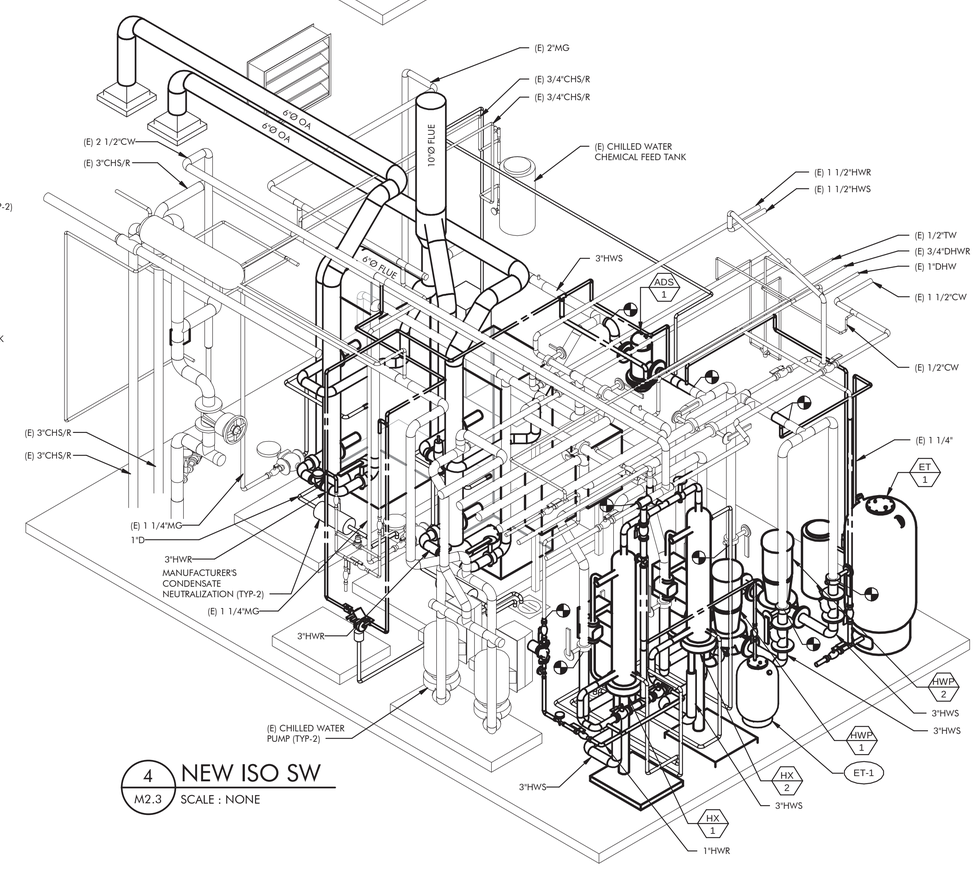

4 M2.3 NEW ISO SW
SCALE : NONE

PLOT DATE:

ENGINEERING
MECHANICAL ENGINEERING CONSULTANT

5434 LONGLEY LANE
RENO, NEVADA 89511
PHONE: 775.826.1919
FAX: 775.826.1918
WEB: CR-ENG.COM

THESE DRAWINGS ARE INSTRUMENTS OF SERVICE AND THE DESIGNS ARE THE EXCLUSIVE PROPERTY OF CR ENGINEERING. THIS DRAWING MAY NOT BE REPRODUCED IN ANY WAY, INCLUDING DESIGN CONCEPTS AND IDEAS, WITHOUT THE EXPRESS WRITTEN AUTHORIZATION FROM CR ENGINEERING.

SEAL:

PROFESSIONAL ENGINEER STATE OF NEVADA
CHRISTOPHER L. ROUNDS
Exp: 12-31-19
MECHANICAL
No. 13968
1/29/19

BID DOCUMENTS

CONSULTANT:

DOUGLAS COUNTY TAHOE JUSTICE COURT
BOILER AND DOMESTIC HOT WATER GENERATOR REPLACEMENT

MECHANICAL ISOMETRICS

REVISIONS:

REV.	DESCRIPTION	DATE
-	-	-
-	-	-
-	-	-
-	-	-
-	-	-
-	-	-

DRAWN BY:	MB
DESIGNED BY:	CL
CHECKED BY:	CL
APPROVED BY:	CLR
DATE:	01/29/19
PROJECT NO:	123918

SHEET NUMBER:

M2.3

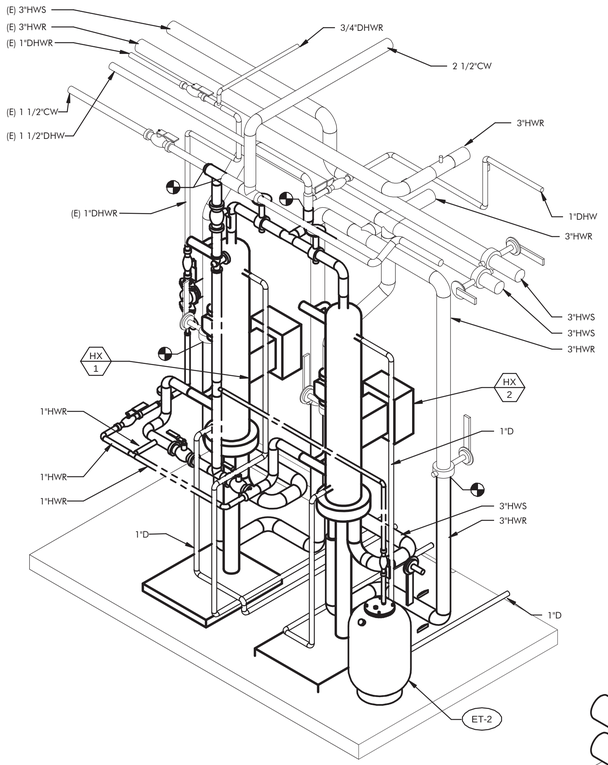

1 M2.4 HEAT EXCHANGERS SE ISO
SCALE : NONE

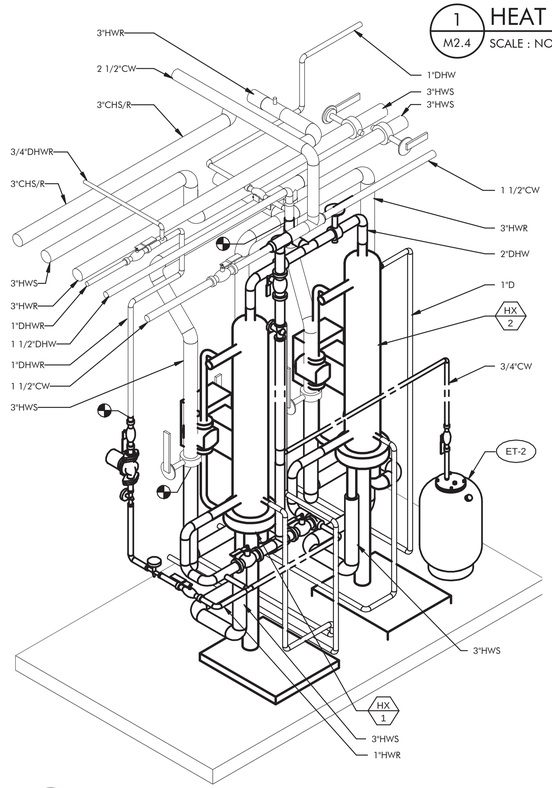

2 M2.4 HEAT EXCHANGER SW ISO
SCALE : NONE

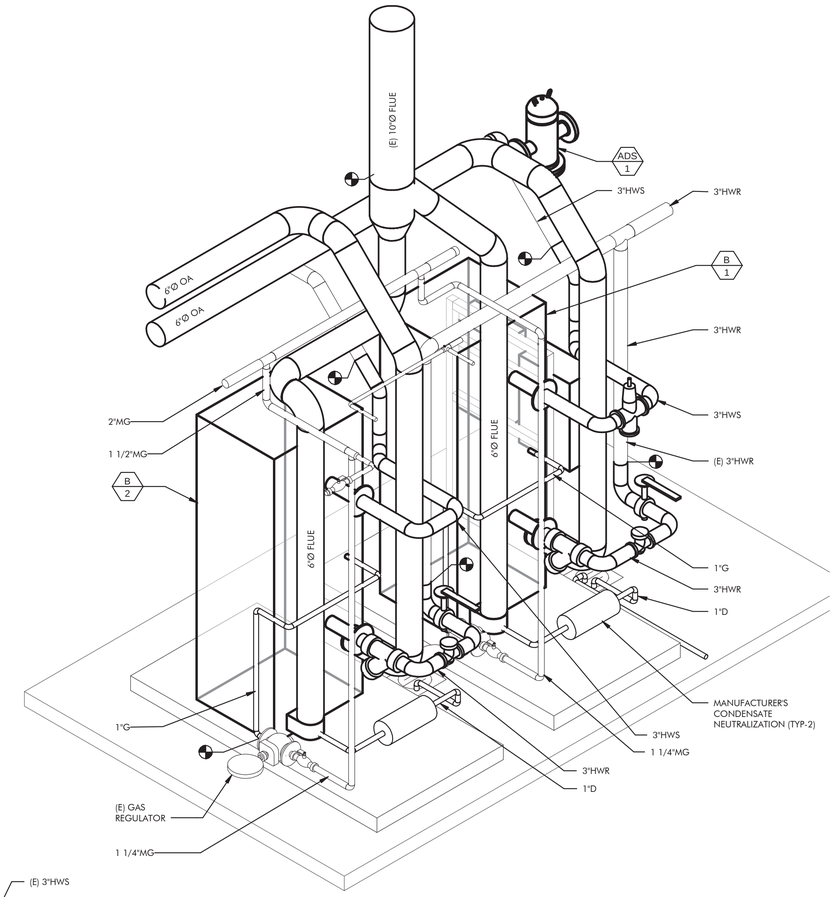

3 M2.4 BOILERS NW ISO
SCALE : NONE

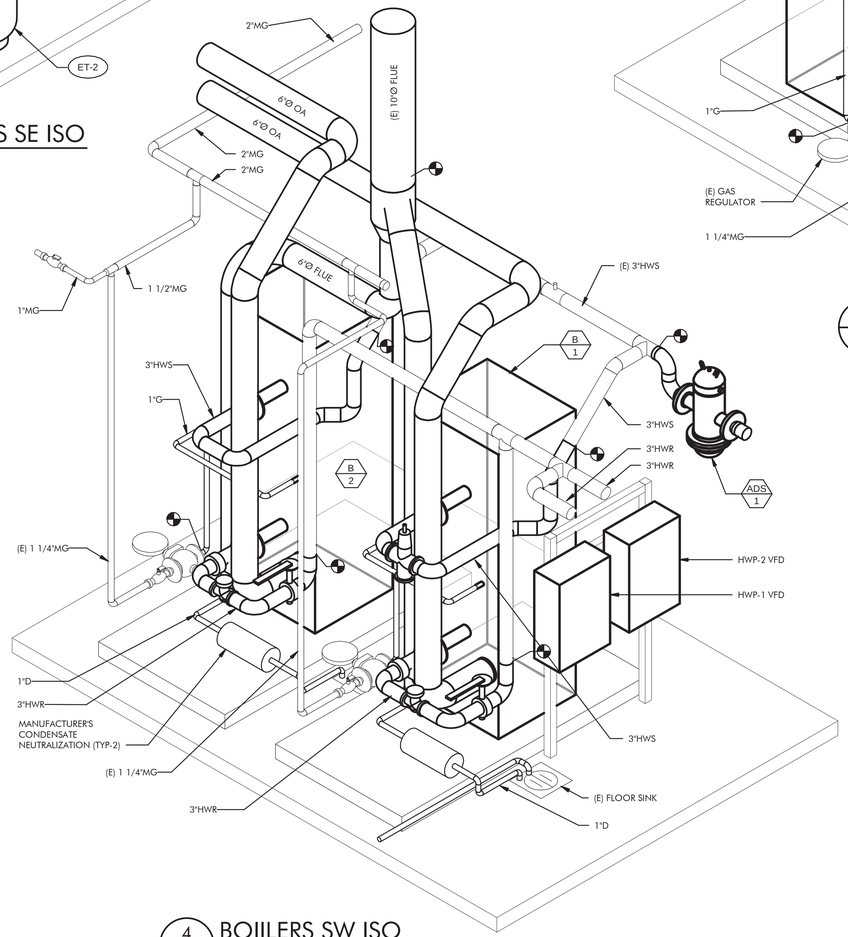

4 M2.4 BOIILERS SW ISO
SCALE : NONE

PLOT DATE:

CR ENGINEERING
MECHANICAL ENGINEERING CONSULTANT
5434 LONGLEY LANE
RENO, NEVADA 89511
PHONE: 775.826.1919
FAX: 775.826.1918
WEB: CR-ENG.COM

THESE DRAWINGS ARE INSTRUMENTS OF SERVICE AND THE DESIGNS ARE THE EXCLUSIVE PROPERTY OF CR ENGINEERING. THIS DRAWING MAY NOT BE REPRODUCED IN ANY WAY, INCLUDING DESIGN CONCEPTS AND IDEAS, WITHOUT THE EXPRESS WRITTEN AUTHORIZATION FROM CR ENGINEERING.

SEAL:

BID DOCUMENTS

CONSULTANT:

DOUGLAS COUNTY TAHOE JUSTICE COURT
BOILER AND DOMESTIC HOT WATER GENERATOR REPLACEMENT

MECHANICAL ISOMETRICS

REVISIONS:

REV.	DESCRIPTION	DATE
-	-	-
-	-	-
-	-	-
-	-	-
-	-	-
-	-	-

DRAWN BY:	MB
DESIGNED BY:	CL
CHECKED BY:	CL
APPROVED BY:	CLR
DATE:	01/29/19
PROJECT NO:	123918

SHEET NUMBER:

M2.4

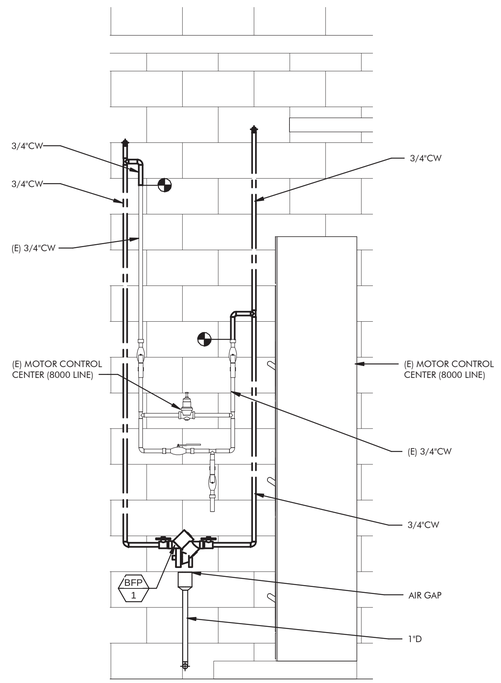

1 M3.1 MECHANICAL SECTION 1
SCALE: 3/4" = 1'-0"

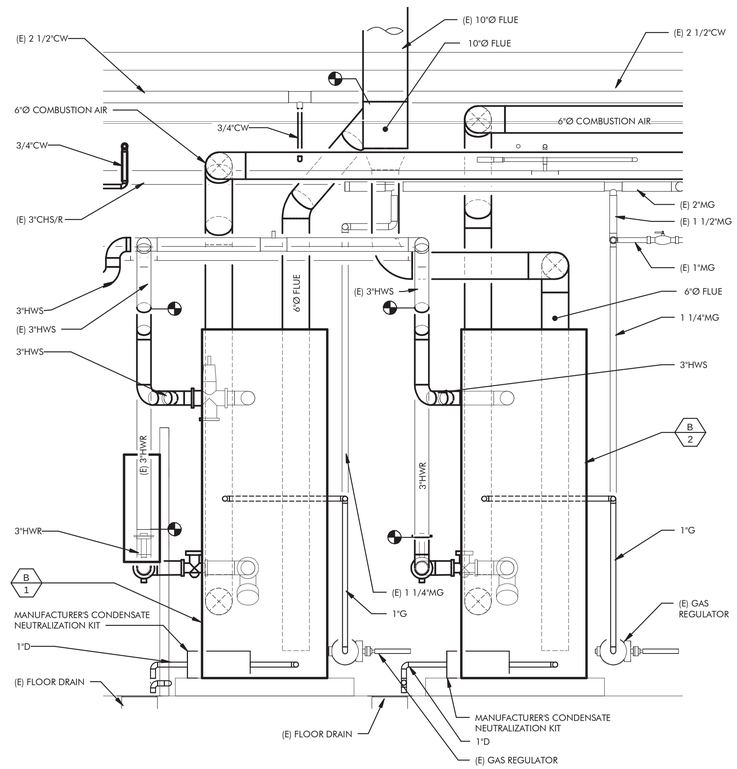

2 M3.1 MECHANICAL SECTION 2
SCALE: 3/4" = 1'-0"

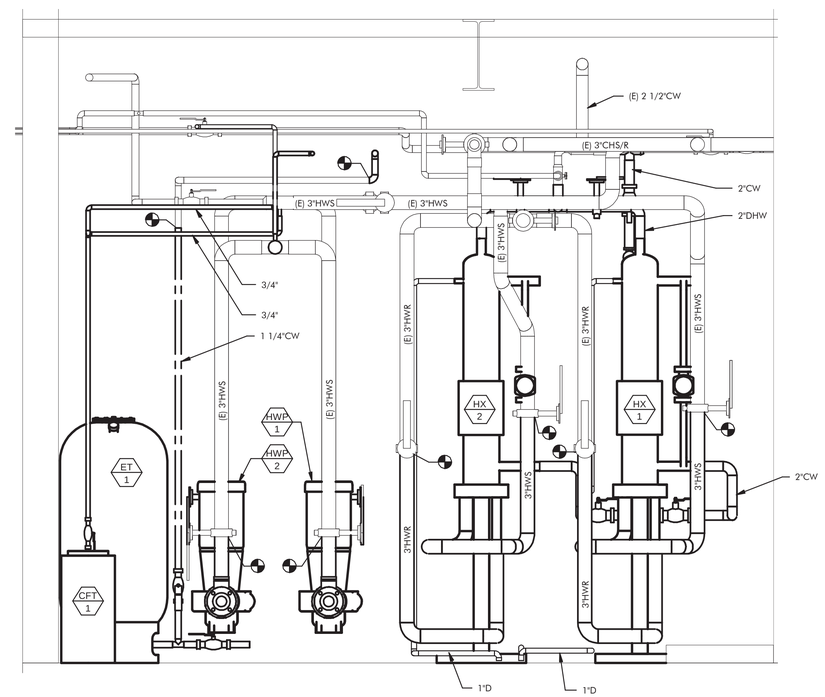

3 M3.1 MECHANICAL SECTION 3
SCALE: 3/4" = 1'-0"

CR ENGINEERING
MECHANICAL ENGINEERING CONSULTANT

5434 LONGLEY LANE
RENO, NEVADA 89511
PHONE: 775.826.1919
FAX: 775.826.1918
WEB: CR-ENG.COM

THESE DRAWINGS ARE INSTRUMENTS OF SERVICE AND THE DESIGNS ARE THE EXCLUSIVE PROPERTY OF CR ENGINEERING. THIS DRAWING MAY NOT BE REPRODUCED IN ANY WAY, INCLUDING DESIGN CONCEPTS AND IDEAS, WITHOUT THE EXPRESS WRITTEN AUTHORIZATION FROM CR ENGINEERING.

SEAL:

PROFESSIONAL ENGINEER STATE OF NEVADA
CHRISTOPHER L. ROUNDS
Exp: 12-31-19
MECHANICAL
No. 13968
1/29/19

BID DOCUMENTS

CONSULTANT:

DOUGLAS COUNTY TAHOE JUSTICE COURT
BOILER AND DOMESTIC HOT WATER GENERATOR REPLACEMENT

MECHANICAL ELEVATIONS

REVISIONS:

REV.	DESCRIPTION	DATE
-	-	-
-	-	-
-	-	-
-	-	-
-	-	-
-	-	-

DRAWN BY:	MB
DESIGNED BY:	CL
CHECKED BY:	CL
APPROVED BY:	CLR
DATE:	01/29/19
PROJECT NO:	123918

SHEET NUMBER:

M3.1

PLOT DATE:

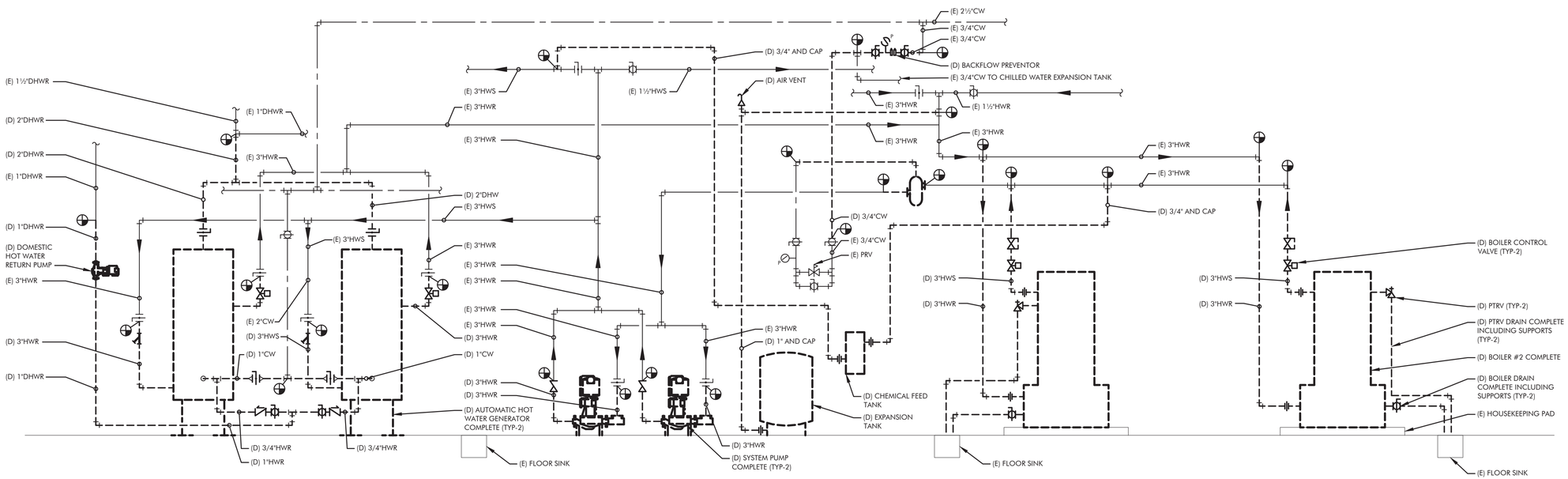

MECHANICAL DEMOLITION PIPING DIAGRAM

SCALE: NONE

1 / M4.1

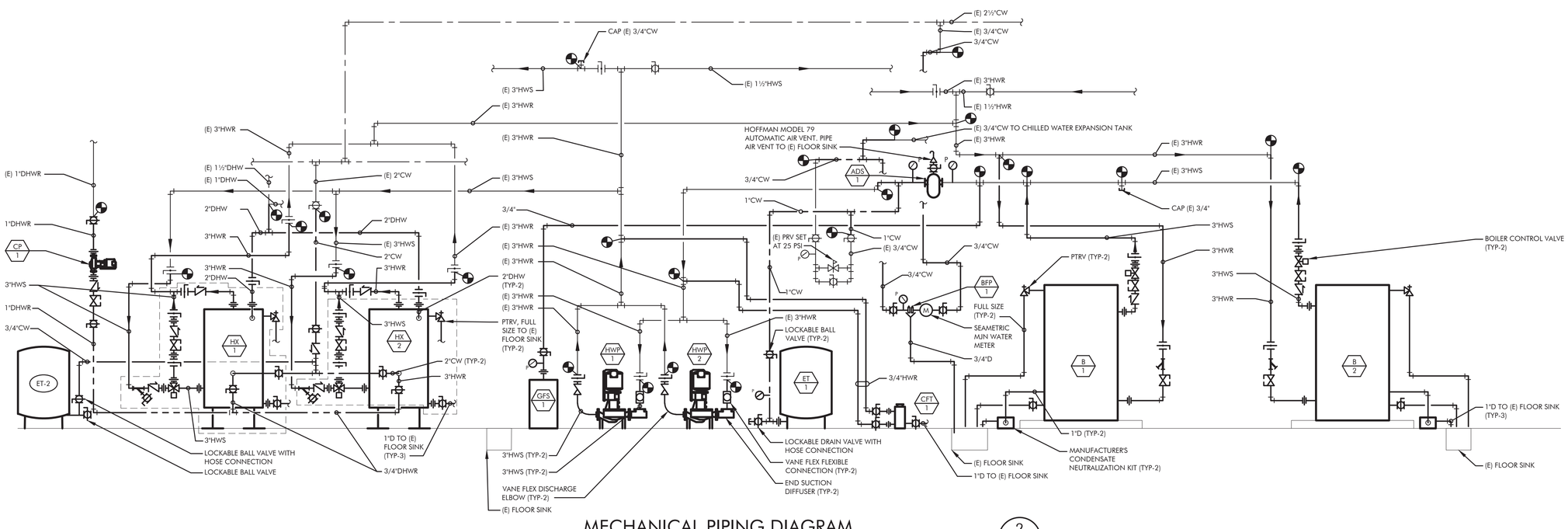

MECHANICAL PIPING DIAGRAM

SCALE: NONE

2 / M4.1

CR ENGINEERING
MECHANICAL ENGINEERING CONSULTANT

5434 LONGLEY LANE
RENO, NEVADA 89511
PHONE: 775.826.1919
FAX: 775.826.1918
WEB: CR-ENG.COM

THESE DRAWINGS ARE INSTRUMENTS OF SERVICE AND THE DESIGNS ARE THE EXCLUSIVE PROPERTY OF CR ENGINEERING. THIS DRAWING MAY NOT BE REPRODUCED IN ANY WAY, INCLUDING DESIGN CONCEPTS AND IDEAS, WITHOUT THE EXPRESS WRITTEN AUTHORIZATION FROM CR ENGINEERING.

SEAL:

PROFESSIONAL ENGINEER STATE OF NEVADA
CHRISTOPHER L. ROUNDS
Exp: 12-31-19
MECHANICAL
No. 13968
1/29/19

BID DOCUMENTS

CONSULTANT:

DOUGLAS COUNTY TAHOE JUSTICE COURT
BOILER AND DOMESTIC HOT WATER GENERATOR REPLACEMENT

MECHANICAL PIPING DIAGRAM

REVISIONS:

REV.	DESCRIPTION	DATE
-	-	-
-	-	-
-	-	-
-	-	-
-	-	-
-	-	-

DRAWN BY:	RT
DESIGNED BY:	CL
CHECKED BY:	CL
APPROVED BY:	CLR
DATE:	01/29/19
PROJECT NO:	123918

SHEET NUMBER:

M4.1

V:\2018\123918\dwgs\123918 M4.1 MECH PIPING DIAGRAM.dwg
1/29/2019 11:22 AM By: Moises Barajas

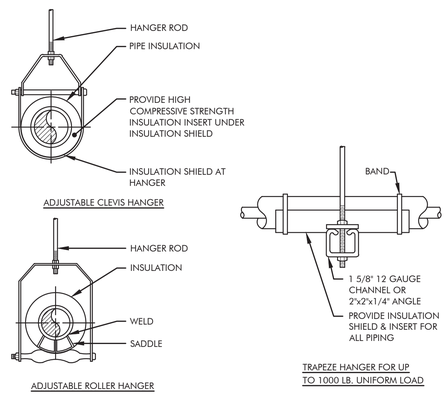

TYPICAL PIPE HANGER DETAIL

1 / M5.1

SCALE: NONE

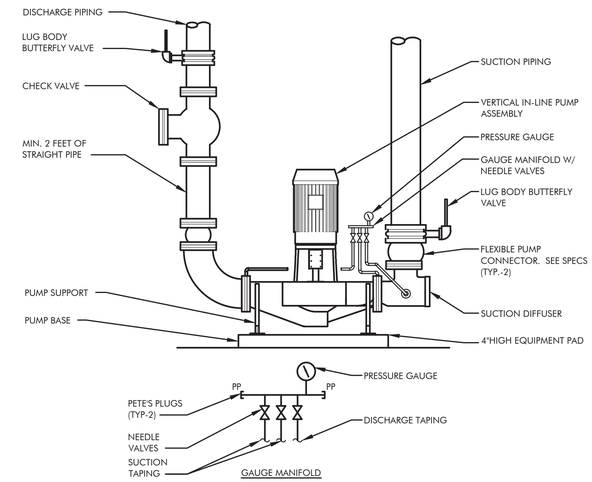

INLINE MOUNTED PUMP DETAIL

2 / M5.1

SCALE: NONE

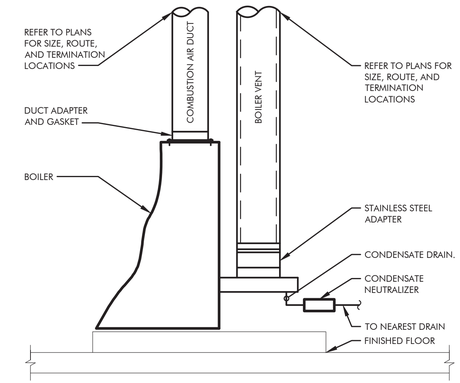

CONDENSING BOILER FLUE CONNECTION DETAIL

3 / M5.1

SCALE: NONE

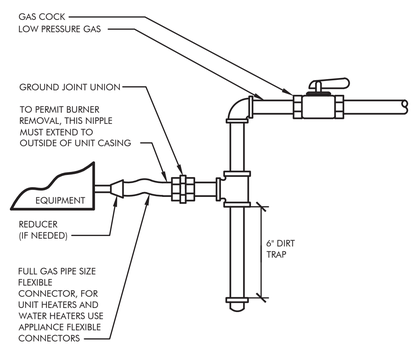

EQUIPMENT GAS PIPING DETAIL

4 / M5.1

SCALE: NONE

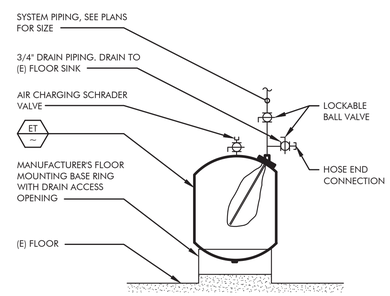

EXPANSION TANK DETAIL

5 / M5.1

SCALE: NONE

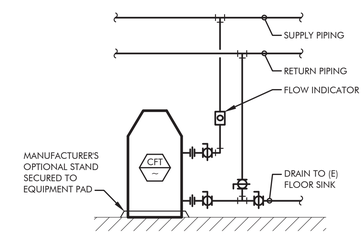

CHEMICAL POT FEEDER DETAIL

6 / M5.1

SCALE: NONE

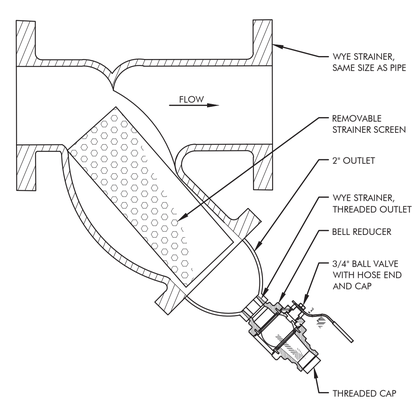

WYE STRAINER WITH HOSE CONNECTION DETAIL

7 / M5.1

SCALE: NONE

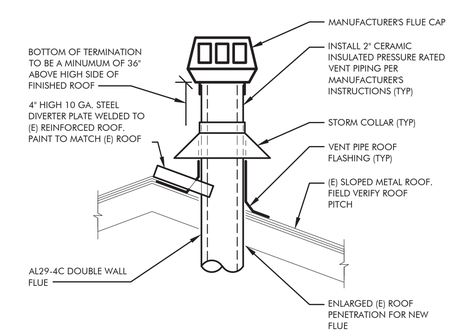

EXHAUST FAN DETAIL

8 / M5.1

SCALE: NONE

CR ENGINEERING
MECHANICAL ENGINEERING CONSULTANT

5434 LONGLEY LANE
RENO, NEVADA 89511
PHONE: 775.826.1919
FAX: 775.826.1918
WEB: CR-ENG.COM

THESE DRAWINGS ARE INSTRUMENTS OF SERVICE AND THE DESIGNS ARE THE EXCLUSIVE PROPERTY OF CR ENGINEERING. THIS DRAWING MAY NOT BE REPRODUCED IN ANY WAY, INCLUDING DESIGN CONCEPTS AND IDEAS, WITHOUT THE EXPRESS WRITTEN AUTHORIZATION FROM CR ENGINEERING.

SEAL:

PROFESSIONAL ENGINEER STATE OF NEVADA
CHRISTOPHER L. ROUNDS
Exp: 12-31-19
MECHANICAL
No. 13968
1/29/19

BID DOCUMENTS

CONSULTANT:

DOUGLAS COUNTY TAHOE JUSTICE COURT
BOILER AND DOMESTIC HOT WATER GENERATOR REPLACEMENT

MECHANICAL DETAIL

REVISIONS:

REV.	DESCRIPTION	DATE
-	-	-
-	-	-
-	-	-
-	-	-
-	-	-
-	-	-

DRAWN BY:	RT
DESIGNED BY:	CL
CHECKED BY:	CL
APPROVED BY:	CLR
DATE:	01/29/19
PROJECT NO:	123918

SHEET NUMBER:

M5.1

W:\2018\123918\dwgs\123918 M5.1 MECH DETAIL.dwg
1/29/2019 11:23 AM By: Moises Barajas

CONTROLS ABBREVIATIONS

AFF/AFG	ABOVE FINISHED FLOOR/GRADE
BSP	BUILDING STATIC PRESSURE SENSOR (WITH PROBES) CO CARBON MONOXIDE
CHS/CHR	CHILLED WATER SUPPLY/RETURN PIPING
CWS/CWR	CONDENSER WATER SUPPLY/RETURN PIPING
CR	STEAM CONDENSATE RETURN PIPING
DDC	DIRECT DIGITAL CONTROL SYSTEM
(E)	EXISTING
EA	EXHAUST AIR
HWS/HWR	HOT WATER SUPPLY/RETURN PIPING
HTS/HTR	HIGH TEMPERATURE HOT WATER SUPPLY/RETURN PIPING
LPS/MPS	LOW/MEDIUM PRESSURE STEAM
MAX	MAXIMUM
MOD	MODULATING ACTUATOR (SPRING RETURN - U.N.O.)
MIN	MINIMUM
(N)	NEW
NC	NORMALLY CLOSED
NO	NORMALLY OPEN
OA	OUTSIDE AIR
PCR	PUMPED STEAM CONDENSATE RETURN PIPING
RA	RETURN AIR
RL	REFRIGERANT LIQUID PIPING
RS	REFRIGERANT SUCTION PIPING
(RX)	REMOVE EXISTING
SA	SUPPLY AIR
TCP	TEMPERATURE CONTROL PANEL
(TR)	TO REMAIN
TWS/TWR	TEMPERED WATER SUPPLY/RETURN PIPING
TYP	TYPICAL
UNO	UNLESS NOTED OTHERWISE
VFD	VARIABLE FREQUENCY DRIVE
2-POS	TWO-POSITION ACTUATOR (SPRING RETURN - U.N.O.)

CONTROL NOTES

1. ALL WIRING TO BE IN CONDUIT. PLENUM RATED CABLE WITH J-HOOKS IS ALLOWED FOR ABOVE CEILING INSTALLATION.
2. CONTROL SYSTEM CONTRACTOR SHALL PROVIDE A COMPLETE DIRECT DIGITAL CONTROL SYSTEM. PROVIDE AND INSTALL ALL NECESSARY WIRING TO MAKE SYSTEM OPERATIONAL. ALL WIRING SHALL BE IN CONDUIT WITH ANY SPLICES MADE IN JUNCTION BOXES. REFER TO CONTROL DIAGRAMS AND SEQUENCE OF OPERATION ON DRAWINGS.
3. CONTROLS CONTRACTOR SHALL CONNECT NEW CONTROLLERS TO THE CONTROL NETWORK AND ADD NEW GRAPHICS. COORDINATE ALL WORK WITH WCSD MAINTENANCE PRIOR TO BID.
4. THE THERMOGRAPHIC FLOOR PLAN SHALL BE UPDATED WITH THE NEW FLOOR PLAN AND ZONING, INCLUDING THE ROOM TEMPERATURE SENSORS.
5. CONTROLS CONTRACTOR TO COORDINATE UNIT LABELING ON GRAPHICS, THERMOSTAT, AND CONTROLLER WITH WCSD MAINTENANCE PRIOR TO INSTALLATION.
6. CABLE SIZE SHALL MEET OR EXCEED ASHRAE STANDARD 135-2016.
7. CONTROLS CONTRACTOR:
   BUILDING CONTROL SERVICES (BCS)
   4750 LONGLEY LANE, SUITE 102
   RENO, NEVADA 89523
   PH: (775) 826-8998
   CONTACT: TOM HULBERT

CONTROLS SYMBOL LEGEND

SYMBOL	ABBR.	DESCRIPTION
AS	AS	AVERAGING SENSOR
BSP	BSP	BUILDING STATIC PRESSURE SENSOR (WITH PROBES)
CO	CO_2	CARBON DIOXIDE SENSOR
CS	CS	CURRENT SENSOR/SWITCH
DP	DP	DIFFERENTIAL PRESSURE SENSOR
DSP	DSP	DUCT STATIC PRESSURE SENSOR
DS	DS	DISCONNECT SWITCH (FUSED)
ESD	ESD	EMERGENCY SHUT-DOWN SWITCH (BREAK-GLASS TYPE)
FD	FD	FIRE DAMPER
FSD	FSD	COMBINATION FIRE/SMOKE DAMPER
FMS	FMS	FLOW MEASURING STATION
FS	FS	FLOW SWITCH
H	H	ALARM HORN
HDS	HDS	HIGH STATIC PRESSURE SENSOR
M	M	MOTORIZED ACTUATOR
MS	MS	MOTOR STARTER
NOX	NOX	NITROGEN OXIDE SENSOR
OA	OA	OUTSIDE AIR TEMPERATURE/HUMIDITY SENSOR
OS	OS	OCCUPANCY SENSOR
OSP	OSP	OUTDOOR STATIC PRESSURE SENSOR
R	R	RELAY (POLES AND VOLTAGE AS REQUIRED)
RLS	RLS	REFRIGERANT LEAK SENSOR
RTS	RTS	ROOM TEMPERATURE SENSOR
S	S	ALARM STROBE
SD	SD	SMOKE DAMPER
2	SD	SMOKE DETECTOR (PRODUCTS OF COMBUSTION DETECTOR)
T	TS	TEMPERATURE SENSOR (PENCIL TYPE)
T	TSTAT	THERMOSTAT OR TEMPERATURE SENSOR @ 48" AFF
TX	TX	TRANSFORMER (SIZE & VOLTAGE AS REQUIRED)
E		BY ELECTRICAL CONTRACTOR
P		BY PLUMBING CONTRACTOR
M		BY MECHANICAL CONTRACTOR
B		SPRING WOUND BYPASS TIMER @ 48" AFF
	OBD	OPPOSED BLADE DAMPER
	PBD	PARALLEL BLADE DAMPER
	TCV	TEMPERATURE CONTROL VALVE (2-WAY OR 3-WAY)
P T		PRESSURE SENSOR, TEMPERATURE SENSOR WITH WELL
P T		PRESSURE GAUGE, TEMPERATURE GAUGE
	P	PUMP
	POC	POINT OF CONNECTION
		POINT OF DISCONNECT
		POWER WIRING BY ELECTRICAL CONTRACTOR
		CONTROL WIRING

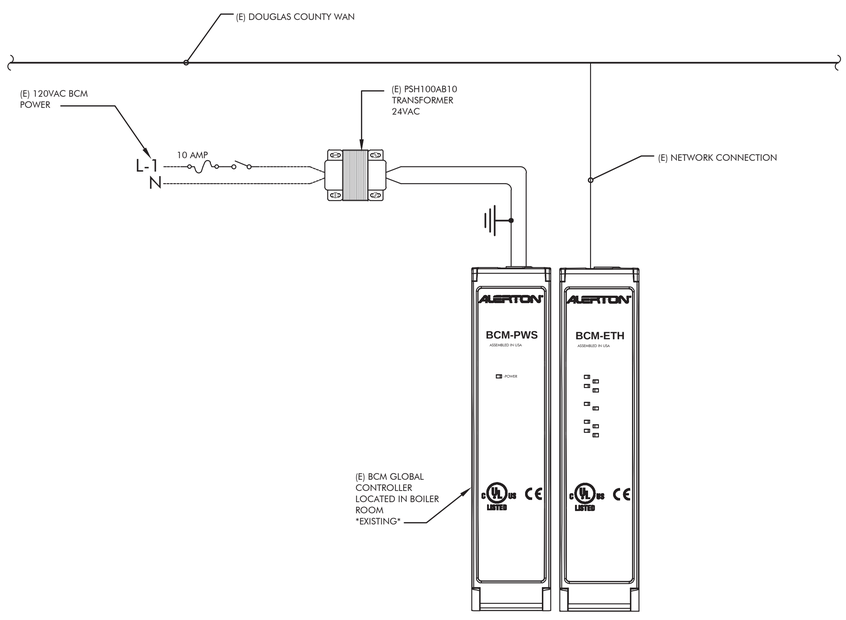

SYSTEM ARCHITECTURE

SCALE: NONE

1
M6.1

ENGINEERING
MECHANICAL ENGINEERING CONSULTANT

5434 LONGLEY LANE
RENO, NEVADA 89511
PHONE: 775.826.1919
FAX: 775.826.1918
WEB: CR-ENG.COM

THESE DRAWINGS ARE INSTRUMENTS OF SERVICE AND THE DESIGNS ARE THE EXCLUSIVE PROPERTY OF CR ENGINEERING. THIS DRAWING MAY NOT BE REPRODUCED IN ANY WAY, INCLUDING DESIGN CONCEPTS AND IDEAS, WITHOUT THE EXPRESS WRITTEN AUTHORIZATION FROM CR ENGINEERING.

SEAL:

PROFESSIONAL ENGINEER STATE OF NEVADA
CHRISTOPHER L. ROUNDS
Exp: 12-31-19
MECHANICAL
No. 13968
1/29/19

BID DOCUMENTS

CONSULTANT:

DOUGLAS COUNTY TAHOE JUSTICE COURT
BOILER AND DOMESTIC HOT WATER GENERATOR REPLACEMENT

MECHANICAL CONTROL DIAGRAMS AND SEQUENCE OF OPERATION

REVISIONS:

REV.	DESCRIPTION	DATE
-	-	-
-	-	-
-	-	-
-	-	-
-	-	-
-	-	-

DRAWN BY:	RT
DESIGNED BY:	CL
CHECKED BY:	CL
APPROVED BY:	CLR
DATE:	01/29/19
PROJECT NO:	123918

SHEET NUMBER:

M6.1

W:\2018\123918\dwgs\123918 M6.1 MECH CONTROL DIAGRAMS AND SEQUENCES OF OPERATIONS.dwg
1/29/2019 11:23 AM By: Matias Barajas

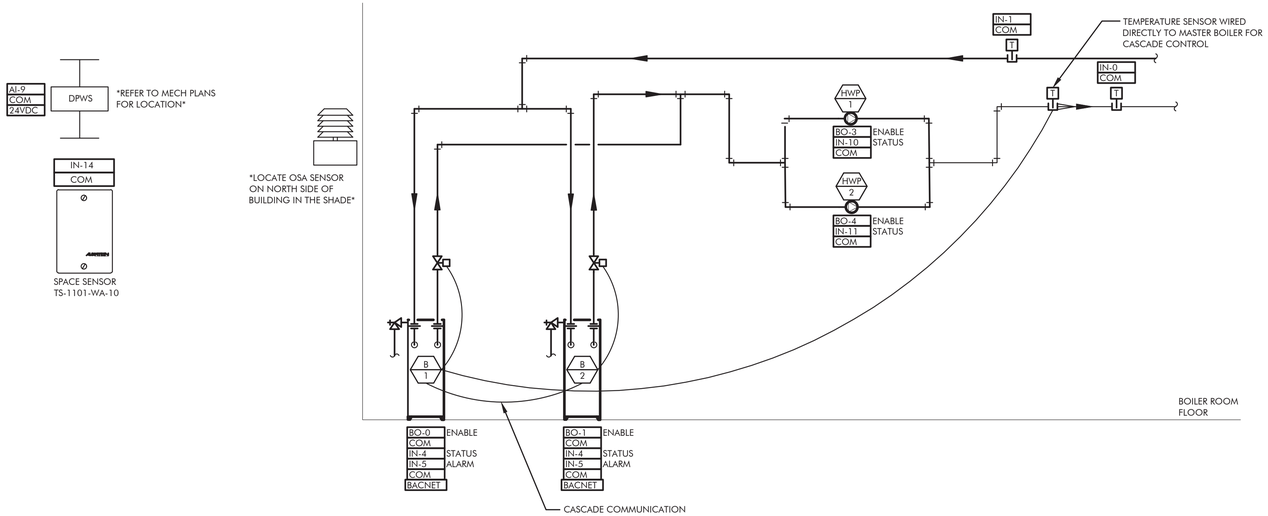

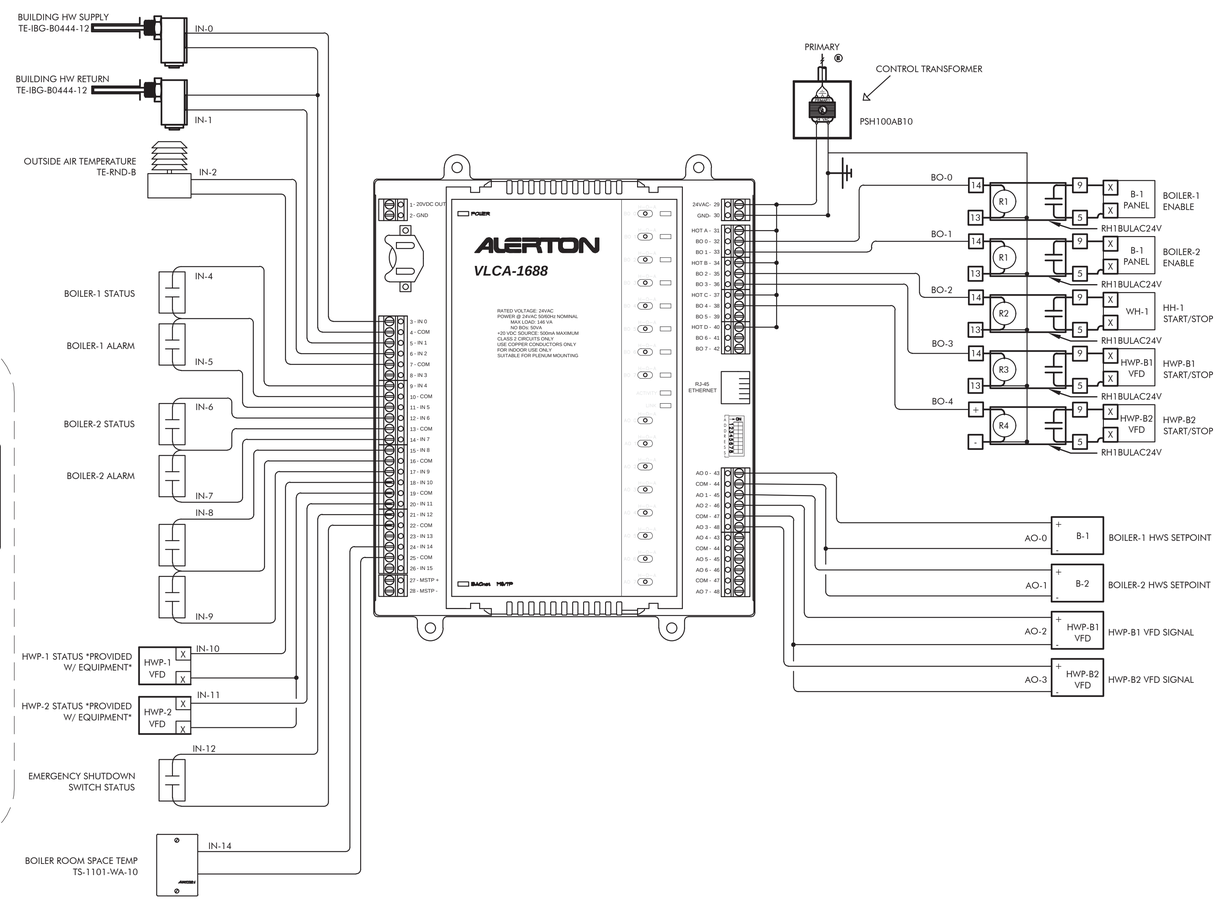

SAFETY SHUTDOWN DETAIL

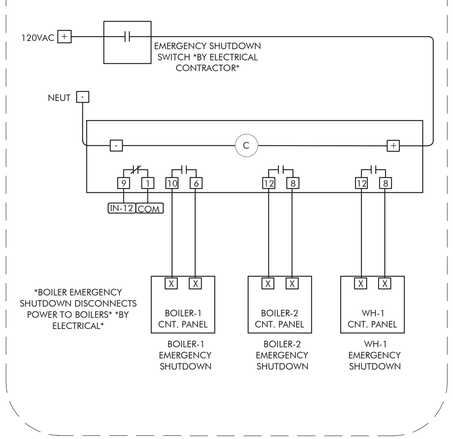

HEATING HOT WATER PLAN CONTROL DIAGRAM

SCALE: NONE

1
M6.2

HEATING HOT WATER SYSTEM SEQUENCE OF OPERATION

A. SETPOINTS

1. HEATING SYSTEM SHALL BE ENABLED AT 60°F AND DISABLED AT 70°F (10°F DEADBAND) OR AS DIRECTED BY THE OWNER. ALL SETTINGS SHALL BE ADJUSTABLE.
2. THE HEATING WATER SUPPLY TEMPERATURE SHALL BE RE-SET BY THE BUILDING MANAGEMENT SYSTEM IN ACCORDANCE WITH THE FOLLOWING CURVE (INITIALLY 1:1 RATIO):

HEATING WATER SUPPLY RESET CURVE

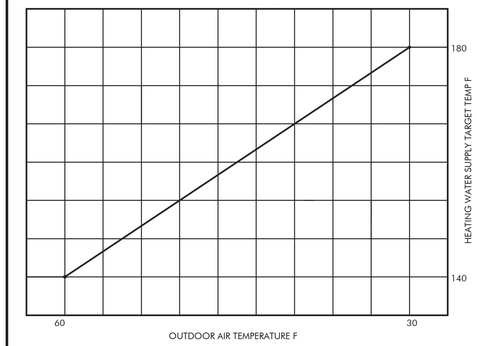

B. BUILDING HEATING PUMPS (HWP-B1 & HWP-B2)

1. WHEN HEATING SYSTEM IS ENABLED, THE BUILDING MANAGEMENT SYSTEM SHALL START LEAD BUILDING SUPPLY PUMP (HWP-B1 OR HWP-B2)
2. UPON FAILURE OF THE LEAD PUMP, THE BUILDING MANAGEMENT SYSTEM SHALL ENERGIZE THE LAG (STANDBY) PUMP.
3. THE BUILDING MANAGEMENT SYSTEM SHALL ALTERNATE LEAD/LAG OF PUMPS WEEKLY.

C. BOILERS (B-1 & B-2) & PUMPS (HWP-1 & HWP-2)

1. THE BUILDING MANAGEMENT SYSTEM SHALL SEND SIGNAL TO MASTER BOILER CONTROLLER, THE BOILER CONTROLLER SHALL ENERGIZE LEAD BOILER (B-1 / B-2) AND START ASSOCIATED PUMP (HWP-1 / HWP-2) UTILIZING THE BOILERS INTERNAL LEAD/LAG CONTROL.
2. BOILER INTERNAL CONTROLS SHALL OPEN BOILER CONTROL VALVE FULLY OPEN, WHEN AUXILIARY SWITCHES ON ACTUATOR INDICATES VALVE HAS OPENED FULLY, BOILER SHALL ENERGIZE
3. THE ASSOCIATED BOILER PUMP SHALL RUN CONTINUOUSLY WHEN BOILER IS IN OPERATION. THE BOILER CONTROLLER SHALL SHUT OFF THE PUMP 15 MINUTES AFTER BOILER SHUTDOWN TO PREVENT RESIDUAL HEAT FROM EXCEEDING BOILER HIGH LIMIT TEMPERATURE.
4. FLOW SWITCH AT BOILER DISCHARGE ALLOWS BOILERS TO ENERGIZE. BOILER INTEGRAL CONTROLS TO MODULATE BURNER TO MAINTAIN SYSTEM HEADER WATER TEMPERATURE SETPOINT.
5. THE BOILER CONTROLLER SHALL INDICATE ALARM CONDITION WHENEVER THE BOILER INDICATES FAILURE (THROUGH ALARM CONTACTS).
6. THE MANUAL RESET HIGH LIMIT CONTROL ON EACH BOILER SHALL BE SET INITIALLY AT APPROXIMATELY 210°F (ADJUSTABLE).
7. IF ANY SPACE TEMPERATURE SENSOR FALLS BELOW 50°F, THEN THE HEATING SYSTEM SHALL BE PLACED IN THE ENABLED MODE.
8. SAFETIES:
   a. FLOW SWITCH SHALL DISABLE BOILER AND SET ALARM.
   b. EMERGENCY SHUTDOWN SWITCH AT EACH BOILER ROOM EXIT SHALL DISCONNECT THE POWER TO ALL FUEL BURNING EQUIPMENT IN BOILER ROOM.

D. OPERATOR'S TERMINAL

1. SEE "TEMPERATURE CONTROL AND EMCS GENERAL NOTES".
2. HEATING WATER SUPPLY TEMPERATURE (°F).
3. HEATING WATER RETURN TEMPERATURE (°F).
4. BOILER SUPPLY TEMPERATURE (°F).
5. BOILER COMMAND (ENABLE/DISABLE).
6. BOILER STATUS (ON/OFF).
7. BOILER ALARM (ALARM/NORMAL).
8. HW PUMP COMMAND (START/STOP).
9. HW PUMP STATUS (ON/OFF).
10. HEATING WATER RESET TEMPERATURE (°F).

ENGINEERING
MECHANICAL ENGINEERING CONSULTANT
5434 LONGLEY LANE
RENO, NEVADA 89511
PHONE: 775.826.1919
FAX: 775.826.1918
WEB: CR-ENG.COM

THESE DRAWINGS ARE INSTRUMENTS OF SERVICE AND THE DESIGNS ARE THE EXCLUSIVE PROPERTY OF CR ENGINEERING. THIS DRAWING MAY NOT BE REPRODUCED IN ANY WAY, INCLUDING DESIGN CONCEPTS AND IDEAS, WITHOUT THE EXPRESS WRITTEN AUTHORIZATION FROM CR ENGINEERING.

SEAL:

PROFESSIONAL ENGINEER STATE OF NEVADA
CHRISTOPHER L. ROUNDS
Exp: 12-31-19
MECHANICAL
No. 13968
1/29/19

BID DOCUMENTS

CONSULTANT:

DOUGLAS COUNTY TAHOE JUSTICE COURT
BOILER AND DOMESTIC HOT WATER GENERATOR REPLACEMENT

MECHANICAL CONTROL DIAGRAMS AND SEQUENCE OF OPERATION

REVISIONS:

REV.	DESCRIPTION	DATE
-	-	-
-	-	-
-	-	-
-	-	-
-	-	-
-	-	-

DRAWN BY:	RT
DESIGNED BY:	CL
CHECKED BY:	CL
APPROVED BY:	CLR
DATE:	01/29/19
PROJECT NO:	123918

SHEET NUMBER:

M6.2

W:\2018\123918\Dwgs\123918 M6.2 HEATING HOT WATER CONTROL DIAGRAM.dwg
1/29/2019 11:23 AM By: Moises Bonjoch

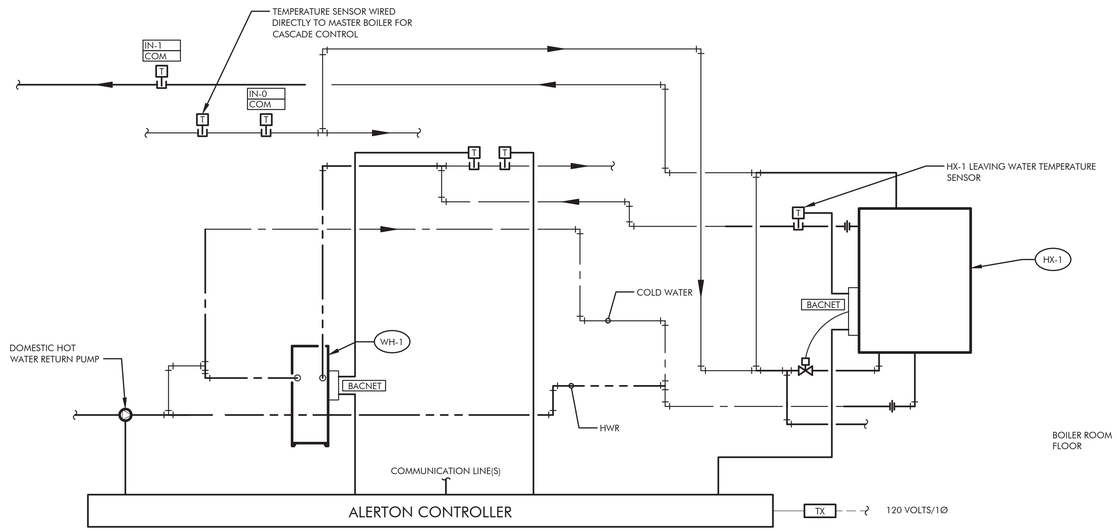

WH-1 AND HX-1 PIPING DIAGRAM

SCALE: NONE

1
M6.3

NOTE: WORK SHOWN IS A BID ALTERNATE. COORDINATE WITH CMAR ON ALTERNATE NUMBER

DOMESTIC WATER SEQUENCE OF OPERATIONS

1. HX-1 CONTROL VALVE SHALL MODULATE TO MAINTAIN A LEAVING DOMESTIC HOT WATER TEMPERATURE OF 115°F
2. WH-1 SHALL MODULATE INTERNAL GAS VALVE TO MAINTAIN DOMESTIC HOT WATER TEMPERATURE OF 115°F
3. BMS SHALL ALARM DOUGLAS COUNTY FACILITY WHEN DOMESTIC HOT WATER IS BELOW 110°F

ENGINEERING
MECHANICAL ENGINEERING CONSULTANT

5434 LONGLEY LANE
RENO, NEVADA 89511
PHONE: 775.826.1919
FAX: 775.826.1918
WEB: CR-ENG.COM

THESE DRAWINGS ARE INSTRUMENTS OF SERVICE AND THE DESIGNS ARE THE EXCLUSIVE PROPERTYOF CR ENGINEERING. THIS DRAWING MAY NOT BE REPRODUCED IN ANY WAY, INCLUDING DESIGN CONCEPTS AND IDEAS, WITHOUT THE EXPRESS WRITTEN AUTHORIZATION FROM CR ENGINEERING.

SEAL:

PROFESSIONAL ENGINEER STATE OF NEVADA
CHRISTOPHER L. ROUNDS
Exp: 12-31-19
MECHANICAL
No. 13968
1/29/19

BID DOCUMENTS

CONSULTANT:

DOUGLAS COUNTY TAHOE JUSTICE COURT
BOILER AND DOMESTIC HOT WATER GENERATOR REPLACEMENT

MECHANICAL CONTROL DIAGRAMS AND SEQUENCE OF OPERATION

REVISIONS:

REV.	DESCRIPTION	DATE
-	-	-
-	-	-
-	-	-
-	-	-
-	-	-
-	-	-

DRAWN BY:	RT
DESIGNED BY:	CL
CHECKED BY:	CL
APPROVED BY:	CLR
DATE:	01/29/19
PROJECT NO:	123918

SHEET NUMBER:

M6.3

V:\2018\123918\dwgs\123918 M6.3 WATER HEATER AND HX CONTROL DIAGRAM.dwg
1/29/2019 11:22 AM By: Moises Barajas

ELECTRICAL SYMBOLS AND NOMENCLATURE

	SINGLE-OUTLET RECEPTACLE
	DOUBLE-OUTLET "DUPLEX" RECEPTACLE
	THREE-PHASE (3Ø) RECEPTACLE (CONFIGURATION AS NOTED)
	QUADRUPLE-OUTLET "QUAD" RECEPTACLE
	SPECIAL RECEPTACLE (VOLTAGE/CONFIGURATION AS NOTED)
J	JUNCTION BOX
	FLOOR MOUNT RECEPTACLE
T	THERMOSTAT
	SAFETY DISCONNECT SWITCH (SIZE/VOLTAGE/CONFIGURATION AS NOTED)
	COMBINATION SAFETY SWITCH/MAGNETIC STARTER
	TELEPHONE/DATA JUNCTION BACKBOX
S	SINGLE-POLE TOGGLE SWITCH (VOLTAGE AS REQUIRED)
S3	MULTI-STATION "THREE-WAY" TOGGLE SWITCH (VOLTAGE AS REQUIRED)
SD	SOLID STATE DIMMING SWITCH (VOLTAGE AS REQUIRED)
SM	MOTOR-RATED TOGGLE SWITCH (VOLTAGE AS REQUIRED)
SK	KEYED TOGGLE SWITCH (VOLTAGE AS REQUIRED)
TV	CABLE TELEVISION OUTLET
	PANELBOARD (NAME/AMP/PHASE/VOLTAGE/CONFIGURATION AS NOTED)
T	TRANSFORMER (NAME/kVA RATING/PHASE/VOLTAGE AS NOTED)
EF	INDICATES MECHANICAL EQUIPMENT
PEC	PHOTO ELECTRIC CELL
TC	TIME CLOCK
C	CONTACTOR (CONFIGURATION AS NOTED)
DD	DUCT DETECTOR FIRE ALARM SYSTEM COMPONENT
SD	SMOKE DETECTOR FIRE ALARM SYSTEM COMPONENT
HD	HEAT DETECTOR FIRE ALARM SYSTEM COMPONENT
Fs	FLOW SWITCH FIRE ALARM SYSTEM COMPONENT
Ts	TAMPER SWITCH FIRE ALARM SYSTEM COMPONENT
SD	HORN/STROBE COMBINATION FIRE ALARM SYSTEM COMPONENT
	MANUAL PULL STATION
	SINGLE-PHASE, 1-POLE CIRCUIT PATH (½" CONDUIT, (2) - #Ø Cu, UNLESS OTHERWISE NOTED) ABOVE FLOOR
	SINGLE-PHASE, 2-POLE CIRCUIT PATH (½" CONDUIT, (3) - #Ø Cu, UNLESS OTHERWISE NOTED) ABOVE FLOOR
	THREE-PHASE, 1-POLE CIRCUIT PATH (½" CONDUIT, (4) - #Ø Cu, UNLESS OTHERWISE NOTED) ABOVE FLOOR
	RETURN CIRCUIT TO PANEL "HOMERUN" (CIRCUIT AS NOTED) ABOVE FLOOR
M	MOTOR (HORSEPOWER AS NOTED)

	SINGLE-PHASE, 1-POLE CIRCUIT PATH (½" CONDUIT, (2) - #Ø Cu, UNLESS OTHERWISE NOTED) BELOW FLOOR
	SINGLE-PHASE, 2-POLE CIRCUIT PATH (½" CONDUIT, (3) - #Ø Cu, UNLESS OTHERWISE NOTED) BELOW FLOOR
	THREE-PHASE, 1-POLE CIRCUIT PATH (½" CONDUIT, (4) - #Ø Cu, UNLESS OTHERWISE NOTED) BELOW FLOOR
	RETURN CIRCUIT TO PANEL "HOMERUN" (CIRCUIT AS NOTED) ABOVE FLOOR
	CIRCUIT BREAKER (AMPS/POLES AS NOTED)
	FUSE (AMPS/POLES AS NOTED)
1	SHEET NOTE INDICATOR
1	SHEET/EQUIPMENT NOTE INDICATOR
	EQUIPMENT NOTE INDICATOR
1	REVISION "DELTA" NOTE INDICATOR
1	FEEDER NOTE INDICATOR
+48"	48" MOUNTING HEIGHT A.F.F. (ACTUAL HEIGHT AS NOTED)
A.F.F.	ABOVE FINISHED FLOOR
A.F.G.	ABOVE FINISHED GRADE
A.T.S.	AUTOMATIC TRANSFER SWITCH
C	CONDUIT
CB	CIRCUIT BREAKER
CLG	CEILING
(E)	EXISTING
FACP	FIRE ALARM CONTROL PANEL
F.B.O.	FURNISHED BY OTHERS
GFI	GROUND FAULT INTERRUPTING TYPE
HID	HIGH INTENSITY DISCHARGE
LTG	LIGHTING
NTS	NOT TO SCALE
MCB	MAIN CIRCUIT BREAKER
"MSB"	MAIN SWITCH BOARD
(N)	NEW
NL	NIGHT LIGHT
TYP	TYPICAL
UG	UNDER GROUND
UON	UNLESS OTHERWISE NOTED
WP	WEATHER PROOF
XFMR	TRANSFORMER
	SHUNT TRIP STATION

MECHANICAL EQUIPMENT CONNECTION SCHEDULE:

MEQ #	DISCONNECTING MEANS	STARTER	VOLTS / Ø	FED FROM	CONDUIT & WIRE	LOAD kVA	NOTES
EB 1	2Ø-AMP MOTOR RATED SWITCH	--	12Ø / 1	'ELA'-24	1/2" C., (2) - #12 Cu & (1) - #12 Cu GRND	1.56	NOTE #5
EB 2	2Ø-AMP MOTOR RATED SWITCH	--	12Ø / 1	'ELA'-26	1/2" C., (2) - #12 Cu & (1) - #12 Cu GRND	1.56	NOTE #5
AUP 1	FACTORY WIRED & INSTALLED VFD-1	VFD BY MECH	48Ø / 3	VIA VFD-1	1/2" C., (3) - #12 Cu & (1) - #12 Cu GRND	6.32	5 HP
AUP 2	FACTORY WIRED & INSTALLED VFD-2	VFD BY MECH	48Ø / 3	VIA VFD-2	1/2" C., (3) - #12 Cu & (1) - #12 Cu GRND	6.32	5 HP
GFR 1	NEMA 5-15R GFI RECEPTACLE	--	12Ø / 1	'LDP'-7	1/2" C., (2) - #12 Cu & (1) - #12 Cu GRND	0.05	--
MX 1	2Ø-AMP MOTOR RATED SWITCH	--	12Ø / 1	'LA'-23	1/2" C., (2) - #12 Cu & (1) - #12 Cu GRND	0.84	--
MX 2	2Ø-AMP MOTOR RATED SWITCH	--	12Ø / 1	'LA'-23	1/2" C., (2) - #12 Cu & (1) - #12 Cu GRND	0.84	--
GFR 1	NEMA 5-15R GFI RECEPTACLE	--	12Ø / 1	'LA'-27	1/2" C., (2) - #12 Cu & (1) - #12 Cu GRND	0.06	--
VFD 1	INCLUDED IN VFD	VFD BY MECH	48Ø / 3	'EHA'-14, 16, 18	1/2" C., (3) - #12 Cu & (1) - #12 Cu GRND	6.32	5 HP
VFD 2	INCLUDED IN VFD	VFD BY MECH	48Ø / 3	'EHA'-14, 16, 18	1/2" C., (3) - #12 Cu & (1) - #12 Cu GRND	6.32	5 HP
TWH 1	3ØA/NF/3P 6ØØV, NI DISC. SAFETY SWITCH	--	48Ø / 3	NOTE #6	1/2" C., (3) - #12 Cu & (1) - #12 Cu GRND	--	6 KW

MECHANICAL EQUIPMENT CONNECTION SCHEDULE NOTES:

1. COORDINATE ALL WORK WITH MECHANICAL CONTRACTOR AND CONTROLS CONTRACTOR PRIOR TO SUBMITTING A BID.
2. SEE MECHANICAL PLANS FOR EXACT LOCATIONS OF MECHANICAL EQUIPMENT.
3. PROVIDE (N) STARTERS WITH: CONTROL POWER TRANSFORMER, AUXILIARY CONTACTS, FULL FEATURE ELECTRONIC OVERLOAD BLOCK INCLUDING UV/OV/PR/FF, & RED RUN LED PILOT LIGHT, HOA SELECTOR SWITCH.
4. CONTRACTOR'S BID SHALL INCLUDE NEW (OVERHEAD) CONDUITS AND WIRING AS REQUIRED FOR ALL EQUIPMENT CONNECTIONS. NEVERTHELESS, CONTRACTOR MAY REUSE ANY EXISTING CONDUITS, BACK BOXES, AND PATHWAYS THAT ARE MADE AVAILABLE DURING THE DEMOLITION PHASE OF WORK.
5. REUSE (E) 3-POLE, 2Ø AMP BREAKER MADE AVAILABLE DURING THE DEMOLITION PHASE IN (E) PANEL 'EHA' AT POSITIONS #14, 16, 18 TO FEED (N) TEMPORARY WATER HEATER 'TWH-1'.

CR ENGINEERING
MECHANICAL ENGINEERING CONSULTANT
5434 LONGLEY LANE
RENO, NEVADA 89511
PHONE: 775.826.1919
FAX: 775.826.1918
WEB: CR-ENG.COM

THESE DRAWINGS ARE INSTRUMENTS OF SERVICE AND THE DESIGNS ARE THE EXCLUSIVE PROPERTY OF CR ENGINEERING. THIS DRAWING MAY NOT BE REPRODUCED IN ANY WAY, INCLUDING DESIGN CONCEPTS AND IDEAS, WITHOUT THE EXPRESS WRITTEN AUTHORIZATION FROM CR ENGINEERING.

SEAL:

PROFESSIONAL ENGINEER
GERALD G. JENSEN
Exp. 6/30/2019
ELECTRICAL
No. E010443
STATE OF NEVADA

01/29/19
BID DOCUMENTS

CONSULTANT:

Jensen Engineering Inc.
Electrical Engineers
9655 Gateway Drive
Reno, Nevada 89521-2968
Ph. (775) 852-2288
Fax (775) 852-3388
email: jeneng@nvbell.net
web: www.jeneng.com

DOUGLAS COUNTY TAHOE JUSTICE COURT
BOILER AND DOMESTIC HOT WATER
GENERATOR REPLACEMENT

ELECTRICAL SYMBOLS & MECHANICAL
EQUIPMENT CONNECTION SCHEDULE

REVISIONS:

REV.	DESCRIPTION	DATE
-	-	-
-	-	-
-	-	-
-	-	-
-	-	-
-	-	-

DRAWN BY:	KPJ
DESIGNED BY:	KPJ
CHECKED BY:	GGJ
APPROVED BY:	GGJ
DATE:	08/08/18
PROJECT NO:	J180JK

SHEET NUMBER:

E0.1

SECTION 16000 – ELECTRICAL SPECIFICATIONS

1.0 GENERAL PROVISIONS
CONSIDER THE GENERAL AND SPECIFIC CONDITIONS OF THE CONTRACT AND THE COMPLETE SET OF DRAWINGS AS PART OF THIS DIVISION OF THE SPECIFICATIONS. WHERE REQUIREMENTS OF THIS DIVISION DO NOT COINCIDE WITH GENERAL AND SPECIAL CONDITIONS, THE STRICTER REQUIREMENTS WILL GOVERN.

2.0 WORK INCLUDED
PROVIDE ALL LABOR, MATERIALS, TOOLS, EQUIPMENT, APPARATUS, ETC. INCLUDING THOSE REASONABLY INFERRED, AS REQUIRED FOR A COMPLETE INSTALLATION OF ANY ELECTRICAL WORK SHOWN WITHIN THESE ELECTRICAL CONSTRUCTION DOCUMENTS, OR DETAILED IN THE ELECTRICAL SPECIFICATIONS. ALL ELECTRICAL WORK SHALL BE PERFORMED BY LICENSED ELECTRICIANS AND TECHNICIANS. REPAIRS AND REPLACEMENTS FOR DEFECTIVE EQUIPMENT OR MATERIALS AS COVERED BY WARRANTEE/GUARANTEE SHALL BE CONSIDERED WITHIN THE SCOPE OF WORK AND SHALL BE PERFORMED AT NO ADDITIONAL COST (EXCEPTION: LIGHTING LAMPS).

3.0 RELATED WORK SPECIFIED ELSEWHERE
ELECTRICAL CONSTRUCTION DOCUMENTS AND ELECTRICAL SPECIFICATION SECTION SHALL BE CONSIDERED AS A WHOLE. ALL ELECTRICAL WORK SHALL ACCOMMODATE THE REQUIREMENTS OF THIS DIVISION TO ENSURE PROPER PERFORMANCE OF ELECTRICAL WORK REQUIRED BY OTHER DIVISIONS.

4.0 SITE INVESTIGATION
ELECTRICAL CONTRACTOR SHALL THOROUGHLY INVESTIGATE ALL EXISTING CONDITIONS AT THE PROJECT SITE PRIOR TO SUBMITTING A BID.

5.0 REGULATIONS AND STANDARDS
ALL ELECTRICAL WORK SHALL BE PERFORMED IN ACCORDANCE WITH THE LATEST ADOPTED EDITIONS OF: THE NATIONAL ELECTRICAL CODE (NEC), NATIONAL FIRE PROTECTION AGENCY (NFPA), INTERNATIONAL BUILDING CODE (IBC), AMERICANS WITH DISABILITIES ACT (ADA), OCCUPATIONAL SAFETY AND HEALTH ADMINISTRATION (OSHA), THE LOCAL FIRE MARSHALL, AND ANY UTILITY COMPANY STANDARDS AS DETAILED IN UTILITY WORK ORDER DRAWINGS. ADDITIONALLY, ALL STATE AND LOCAL CODES AND ORDINANCES SHALL BE UPHELD. CONTRACTOR SHALL NOT OMIT ANY COMPONENT OR PORTION OF THESE ELECTRICAL CONSTRUCTION DOCUMENTS WHICH MAY EXCEED THE LISTED STANDARDS. NO ELECTRICAL WORK DETAILED IN THE ELECTRICAL CONSTRUCTION DOCUMENTS OR ELECTRICAL SPECIFICATION SECTION SHALL BE INTERPRETED TO PERMIT WORK WHICH FAILS TO CONFORM TO THESE REQUIREMENTS. WHERE CONFLICTS OCCUR, HIGHER STANDARDS SHALL GOVERN. RULINGS AND INTERPRETATIONS BY GOVERNING AGENCIES SHALL BE CONSIDERED A PART OF THIS DIVISION IF COMMONLY IMPOSED UPON THE TRADE PRIOR TO SUBMISSION OF BID.

6.0 FEES
ELECTRICAL CONTRACTOR SHALL INCLUDE ALL FEES AND ROYALTIES FOR PERMITS, TESTS AND INSPECTIONS. UTILITY COMPANY CHARGES FOR ELECTRICAL POWER DURING CONSTRUCTION ARE NOT THE RESPONSIBILITY OF THE ELECTRICAL CONTRACTOR.

7.0 DRAWINGS AND SPECIFICATIONS
7.1 ELECTRICAL CONTRACTOR SHALL VERIFY THE EXACT LOCATIONS, ELEVATIONS, AND INSTALLATION REQUIREMENTS OF ALL ELECTRICAL EQUIPMENT PRIOR TO "ROUGH-IN" (INCLUDING RECEPTACLES, SWITCHES, CONDUITS, SWITCHBOARDS, PANELBOARD, ETC.). LOCATIONS SHALL BE VERIFIED FOR APPROPRIATE SPACE (LENGTH, WIDTH, AND HEIGHT) AND CLEARANCE PRIOR TO FABRICATING OR ORDERING ANY EQUIPMENT OR MATERIALS. ALL DISCREPANCIES SHALL BE REPORTED TO THIS ENGINEER IMMEDIATELY. FINAL CONNECTIONS SHALL BE MADE IN ACCORDANCE WITH MANUFACTURER'S APPROVED WIRING DIAGRAMS, DETAILS AND INSTRUCTIONS.

7.2 ELECTRICAL CONTRACTOR SHALL SUBMIT WRITTEN REQUEST-FOR-INFORMATION (RFI) DOCUMENTS TO THIS ENGINEER PRIOR TO PERFORMING ANY WORK WHERE AMBIGUITY ARISES. ELECTRICAL CONTRACTOR SHALL NOT PERFORM ANY FIELD MODIFICATIONS OR DEVIATIONS FROM THE ELECTRICAL CONSTRUCTION DOCUMENTS AND/OR SPECIFICATIONS WITHOUT APPROVED WRITTEN RESPONSE FROM THIS ENGINEER THROUGH AN APPROPRIATELY SUBMITTED RFI.

7.3 ELECTRICAL CONTRACTOR SHALL PERFORM ELECTRICAL WORK PER MANUFACTURER'S DIRECTIONS WHERE SAID DETAILS ARE NOT SPECIFICALLY COVERED OR INDICATED BY THESE ELECTRICAL CONSTRUCTION DOCUMENTS AND ELECTRICAL SPECIFICATIONS. WHEN CONFLICT ARISES, SECTION 7.2 OF THIS SPECIFICATION SHALL DICTATE PERFORMANCE.

7.4 ALL SERVICES RENDERED BY THIS ENGINEER ARE PROFESSIONAL OPINIONS AND RECOMMENDATIONS, ONLY. UNDER NO CIRCUMSTANCE IS IT THE INTENT OF THIS ENGINEER TO DIRECTLY CONTROL THE PHYSICAL ACTIVITIES OF THE CONTRACTOR OR HIS EMPLOYEES.

8.0 MATERIALS
8.1 APPEARANCE AND FINISH OF MATERIALS SHALL BE OF THE HIGHEST STANDARDS. ALL MATERIALS AND EQUIPMENT SHALL BE NEW, OPERATING NORMALLY, AND OF HIGHEST AVAILABLE QUALITY. ANY DEFECTIVE MATERIALS SHALL BE IDENTIFIED AND REMOVED FROM SITE, IMMEDIATELY.

8.2 PROVIDE UNDERWRITERS LABORATORY (UL) LISTED MATERIALS AND EQUIPMENT WHEREVER STANDARDS FOR SAID ITEMS HAVE BEEN ESTABLISHED. UNLISTED DEVICES SHALL BE INSTALLED IN EQUIPMENT NORMALLY LISTED OR LABELED, AND SHALL CONFORM TO UL STANDARDS AS FAR AS POSSIBLE.

8.3 ALL CATALOG NUMBERS ARE GIVEN TO ASSIST IN IDENTIFYING THE BASIC REQUIREMENTS OF THIS PROJECT AND INDICATE THE MINIMUM LEVEL OF QUALITY. CATALOG NUMBERS WILL, GENERALLY, NOT SPECIFY COLOR AND ACCESSORIES. CONSULT OWNER AND ARCHITECT FOR COLOR AND ACCESSORY DETAILS.

9.0 CLEAN WORK
REGULARLY REMOVE DEBRIS FROM THE PROJECT SITE, AS REQUIRED, DURING CONSTRUCTION. CLEAN ALL RACEWAYS AND OTHER EQUIPMENT PRIOR TO FINAL ACCEPTANCE BY OWNER.

10.0 CLOSING IN OF UNINSPECTED WORK
ELECTRICAL CONTRACTOR SHALL NOT CLOSE IN OR CONCEAL ANY ELECTRICAL WORK PERFORMED PRIOR TO INSPECTION AND APPROVAL.

11.0 STANDARD FIELD TESTS
11.1 ELECTRICAL CONTRACTOR SHALL PERFORM CONDUCTOR INSULATION TESTING AND SHALL PROVIDE THE ENGINEER WITH TABULATED AND SIGNED TEST REPORTS FOR THE FOLLOWING TESTS:

CONDUCTOR INSULATION SHALL BE TESTED USING A 500 VOLT DC INSULATION TESTER. TEST ALL POWER CONDUCTORS DISCONNECTED, INSTALLED IN PLACE, AND ACCORDING TO TEST EQUIPMENT MANUFACTURES RECOMMENDATIONS. MINIMUM RESISTANCE VALUES FOR BRANCH CIRCUIT WIRING SHALL BE 50 MEGOHMS AFTER 30 SECONDS. CORRECT ANY DEFICIENT CONDUCTORS PRIOR TO ENERGIZING.

PERFORM POLARITY TESTS FOR ALL UTILIZATION EQUIPMENT, OUTLETS, AND RECEPTACLES.

CHECK ALL MECHANICAL LUGS FOR PROPER TENSION. COMPLETE MECHANICAL LUG CONNECTIONS USING A CALIBRATED TORQUE WRENCH (OR SCREWDRIVER) ACCORDING TO LUG MANUFACTURES TIGHTENING RECOMMENDATIONS.

11.2 ANY WORK WHICH FAILS TO MEET THE REQUIREMENTS OF THESE ELECTRICAL CONSTRUCTION DOCUMENTS, OR ANY OF THE ABOVE-LISTED TESTING SHALL BE CONSIDERED DEFECTIVE AND SHALL BE PROMPTLY CORRECTED OR REMOVED FROM SITE.

SECTION 16000 – ELECTRICAL SPECIFICATIONS (CONTINUED)

12.0 IDENTIFICATION
ELECTRICAL CONTRACTOR SHALL PROVIDE AND INSTALL PRINTED WEATHERPROOF LABELS FOR ALL ELECTRICAL OUTLETS AND EQUIPMENT. LABELS SHALL INDICATE DEVICE DESIGNATION, EQUIPMENT SERVED, VOLTS/PHASE/WIRE, AND SOURCE FEEDING THE EQUIPMENT.

PROVIDE ALL PANELBOARDS WITH ACCURATE AND TYPED DIRECTORIES, INSTALLED UNDER CLEAR PLASTIC COVER. PROVIDE DIRECTORY INFORMATION TO OWNER FOR APPROVAL PRIOR TO FINALIZATION.

13.0 PENETRATIONS
13.1 PROVIDE AND INSTALL APPROVED UL LISTED ASSEMBLY AND EMPLOY ARCHITECTURALLY APPROVED METHODS FOR WATER-TIGHT PENETRATION OF EXTERIOR WALLS. CONSULT OWNER FOR DETERMINATION OF PENETRATION LOCATIONS FOR EXTERIOR WALLS.

13.2 PROVIDE AND INSTALL APPROVED UL LISTED MATERIALS AND EMPLOY ARCHITECTURALLY APPROVED METHODS FOR PENETRATION OF FIRE-RATED ASSEMBLIES. ELECTRICAL CONTRACTOR SHALL NOT EXCEED THE MAXIMUM ALLOWABLE SURFACE PENETRATIONS. CONSULT ARCHITECT FOR DETERMINATION OF PENETRATION LOCATIONS INTO FIRE-RATED ASSEMBLIES.

14.0 SUPPORTS AND FASTENINGS
ELECTRICAL CONTRACTOR SHALL PROVIDE AND INSTALL SUPPORTS AND HANGARS FOR ALL RACEWAYS, CABINETS, BOXES, BACK-BOXES, AND OTHER EQUIPMENT. SUPPORTS AND HANGARS SHALL BE SECURELY ATTACHED TO STRUCTURE USING: (a) STRUCTURAL CHANNEL AND THREADED HANGAR ROD "TRAPEZE" RACKS, (b) TOGGLE BOLTS FOR HOLLOW MASONRY, (c) EXPANSION BOLTS FOR SOLID MASONRY, (d) CONCRETE PRESET INSERTS FOR EXPANSION BOLTS FOR CONCRETE, (e) MACHINE SCREWS, OR BOLTS AND BEAM CLAMPS FOR METAL, AND (f) WOOD SCREWS OR LAG BOLTS FOR WOOD CONSTRUCTION. ALL SUPPORTS AND HANGARS SHALL BE RATED FOR FIVE (5) TIMES THE ACTUAL LOAD.

15.0 TRADE COORDINATION
ELECTRICAL CONTRACTOR SHALL COORDINATE THE ELECTRICAL INSTALLATION WORK WITH ALL OTHER CONTRACTORS. REFER TO PLANS AND SPECIFICATIONS OF OTHER TRADES. ELECTRICAL CONTRACTOR SHALL CONSULT OTHER CONTRACTORS TO ENSURE TIMELY AND APPROPRIATE CONNECTIONS AND INTERFACE WITH PLUMBING, MECHANICAL, FIRE/SMOKE DAMPERS, OR OTHER EQUIPMENT. ALL REQUIRED WIRING AND CONTROL COMPONENTS SHALL BE CONSIDERED PART OF THE SCOPE OF WORK.

16.0 RECORD DRAWINGS
ELECTRICAL CONTRACTOR SHALL PROVIDE A NEAT AND COMPLETE SET OF "AS-BUILT" RECORD DRAWINGS TO THE OWNER WITHIN TEN (10) DAYS OF FINAL ACCEPTANCE OF WORK. RECORD DRAWINGS SHALL INDICATE ALL DEVIATIONS FROM THE ELECTRICAL CONSTRUCTION DOCUMENTS, LOCATIONS OF STUB-OUTS AND CONCEALED ITEMS (PER FIELD DIMENSIONS) RECORD DRAWINGS SHALL BE OF EQUAL TO OR HIGHER QUALITY THAN THESE ELECTRICAL CONSTRUCTION DOCUMENTS (INCLUDING SIZE, CLARITY AND MEDIUM). ALL MAINTENANCE AND OPERATING MANUALS AS WELL AS ANY ADDITIONAL INSTRUCTIONS, SHALL BE CONSIDERED A PART OF THE RECORD DRAWINGS.

17.0 ELECTRICAL SUBMITTALS
ELECTRICAL CONTRACTOR SHALL SUBMIT SIX (6) COPIES OF FACTORY SHOP-DRAWINGS FOR ALL ELECTRICAL COMPONENTS PROPOSED FOR THIS PROJECT TO THIS ENGINEER, AND TO THE OWNER. ELECTRICAL CONTRACTOR SHALL OBTAIN WRITTEN APPROVAL FROM THIS ENGINEER, AND THE OWNER, OF ALL PROVIDED MANUFACTURER'S DATA SHEETS FOR ALL ELECTRICAL COMPONENTS. ANY PROPOSED SUBSTITUTIONS SHALL MEET THE PROJECT REQUIREMENTS EXACTLY, AND SHALL BE OF EQUAL OR GREATER QUALITY IN ALL RESPECTS, AND REQUIRE THIS ENGINEER'S APPROVAL. SUBSTITUTION PROPOSALS MUST BE SUBMITTED NO LESS THAN TEN (10) WORKING DAYS PRIOR TO BID ACCEPTANCE. ELECTRICAL CONTRACTOR SHALL ORDER AND/OR RELEASE ANY MATERIALS PROMPTLY AFTER SUBMITTAL APPROVAL. NO SUBSTITUTIONS OR ALTERNATE METHODS SHALL BE ACCEPTED AS A RESULT OF UNTIMELY WORK.

18.0 OWNERSHIP OF DOCUMENTS
THESE ELECTRICAL CONSTRUCTION DOCUMENTS AND SPECIFICATIONS, AND ALL RELATED DOCUMENTS CONSTITUTE COPYWRITTEN MATERIALS OF JENSEN ENGINEERING, INC. ALL RIGHTS RESERVED. THESE MATERIALS SHALL REMAIN THE SOLE PROPERTY OF JENSEN ENGINEERING, INC. AND MAY NOT BE REPRODUCED, DISTRIBUTED, OR USED FOR ANY PURPOSE WITHOUT THE EXPLICIT WRITTEN CONSENT OF JENSEN ENGINEERING, INC.

19.0 ONGOING OPERATIONS
ELECTRICAL CONSTRUCTION WORK SHALL BE PERFORMED WITH CONSIDERATION FOR ONGOING OPERATIONS AT THE PROJECT SITE AND SHALL MINIMIZE DISRUPTIONS IN EVERY RESPECT. PROVIDE AND INSTALL BARRICADES, DUST CONTAINMENT, NOISE ABATEMENT, ETC. TO ENSURE SAFETY AND COMFORT OF NON-CONSTRUCTION PERSONNEL ON THE PROJECT SITE. ANY INTERRUPTIONS TO EXISTING FIRE-ALARM, DATA/COMMUNICATION, OR ELECTRICAL SERVICES SHALL BE COORDINATED WITH THE OWNER AND THIS ENGINEER PRIOR TO ENGAGEMENT. DISRUPTIONS SHALL BE TEMPORARY AND MUST BE SCHEDULED 48 HOURS IN ADVANCE.

20.0 MATCH EXISTING
ELECTRICAL CONTRACTOR SHALL COMPLETELY IDENTIFY ANY COMPONENTS WHERE DIRECTED TO MATCH EXISTING, AND SHALL PROVIDE AND INSTALL THE ITEM(S) EXACTLY. WHERE EXACT REPLACEMENT IS NOT AVAILABLE, NEW EQUIPMENT SHALL MATCH EXISTING EQUIPMENT IN FUNCTION AND APPEARANCE, AND MUST BE OF EQUAL OR GREATER QUALITY THAN EXISTING EQUIPMENT. WHERE SCOPE OF WORK OCCURS AT AN EXISTING FACILITY, ALL MATERIALS AND WORKMANSHIP SHALL BE OF GREATER QUALITY THAN EXISTING. TRANSITIONS FROM NEW WORK AREAS TO EXISTING AREAS SHALL BE SEAMLESS IN APPEARANCE AND FUNCTION.

21.0 CONDUCTORS
ALL CONDUCTORS SHALL CONFORM TO THE REQUIREMENTS STATED UNDER SECTION 5.0 OF THIS ELECTRICAL SPECIFICATION, AND UL LISTING STANDARDS. ALL CONDUCTORS SHALL BE COPPER, TYPE THHN/THWN-2 OR XHHW-2, SOFT-DRAWN, CONCEALED IN CONDUIT. CONDUCTORS SIZED #10 AWG AND SMALLER SHALL BE SOLID. CONDUCTORS SIZED #8 AWG AND LARGER SHALL BE STRANDED. MINIMUM WIRE SIZE SHALL BE #12 AWG, UNLESS OTHERWISE NOTED. CONDUCTOR INSULATION SHALL BE 600 VOLT RATED. CONDUCTORS SHALL BE CONTINUOUS FROM ORIGIN TO EQUIPMENT WITHOUT SPLICES, PER NEC. WHERE REQUIRED, SPLICES SHALL OCCUR IN SPLICE BOXES PER THIS SPECIFICATION. WIRE/CABLE SHALL BE HANDLED TO AVOID DAMAGE TO BOTH CONDUCTOR AND INSULATION. WIRE/CABLE SHALL BE DELIVERED IN STANDARD COILS OR REELS WITH SUITABLE PROTECTION FROM WEATHER AND DAMAGE DURING STORAGE, HANDLING, AND INSTALLATION. ELECTRICAL CONTRACTOR SHALL COLOR CODE CONDUCTORS CONSISTENTLY THROUGHOUT THE PROJECT ACCORDING TO THE FOLLOWING OUTLINE:

VOLTAGE	PHASE A	PHASE B	PHASE C	NEUTRAL	GROUND
120/208V	BLACK	RED	BLUE	WHITE	GREEN
277/480V	BROWN	ORANGE	YELLOW	GRAY	GREEN OR GREEN/YELLOW STRIPE

SECTION 16000 – ELECTRICAL SPECIFICATIONS (CONTINUED)

22.0 CONDUIT SYSTEMS
22.1 CONDUIT AND CONDUCTOR ROUTES SHALL BE DETERMINED BY THE ELECTRICAL CONTRACTOR AT THE TIME OF INSTALLATION AND ARE SHOWN ON THESE PLANS FOR DIAGRAM PURPOSE, ONLY. ALL LOCATIONS EXPOSED TO PHYSICAL DAMAGE (INCLUDING PUBLIC CAUSEWAY), OR EXTERIOR ELEMENTS SHALL BE RIGID GALVANIZED STEEL, OR INTERMEDIATE METALLIC CONDUIT (MINIMUM).

22.2 TYPE EMT CONDUIT SHALL BE PERMITTED FOR INTERIOR (DRY) LOCATIONS AND SHALL BE CONCEALED WHEREVER POSSIBLE. INTERIOR "HOME-RUNS" SHALL BE INSTALLED USING TYPE EMT CONDUIT. EMT CONDUIT SHALL NOT BE PERMITTED WHERE CONDUIT IS SUBJECT TO PHYSICAL DAMAGE, INCLUDING: EXPOSED ON ROOF-TOP, PUBLIC AREAS AND PATHS, OR CORROSIVE ATMOSPHERES. ALL FITTINGS SHALL BE STEEL. CONNECTORS SHALL HAVE INSULATED THROATS.

22.3 TYPE FMC (INCLUDING TYPE "MC" CABLE) SHALL ONLY BE USED IN DRY, CONCEALED LOCATIONS (INCLUDING MILLWORK AND CASEWORK), WHERE ALSO ALLOWED BY LOCAL CODE AND SHALL NOT OPERATE MORE THAN ONE CIRCUIT. TYPE FMC SHALL BE USED FOR SHORT CONNECTIONS TO MOTORS AND VIBRATING EQUIPMENT IN DRY, INDOOR LOCATIONS.

22.4 TYPE LFMC SHALL BE USED FOR SHORT CONNECTIONS (3' MAX) TO MOTORS AND EQUIPMENT IN WET OR OUTDOOR LOCATIONS

22.5 TYPE LFNC CONDUIT IS NOT PERMITTED.

22.6 TYPE ENT CONDUIT IS NOT PERMITTED.

23.0 TERMINATIONS AND SPLICES
CONNECTORS SHALL BE SCOTCHLOK OR APPROVED EQUAL FOR WIRE SIZES #14 AWG THROUGH #8 AWG. USE SOLDERLESS, FULLY ANNULAR PRESSURE TYPE CONNECTIONS FOR ALL OTHERS.

24.0 RECEPTACLES, SWITCHES, WIRING DEVICES AND PLATES
PROVIDE AND INSTALL COMMERCIAL GRADE RECEPTACLES, SWITCHES, PILOT LIGHTS, ETC. AS INDICATED IN THE ELECTRICAL CONSTRUCTION DOCUMENTS AND ELECTRICAL SPECIFICATIONS. PROVIDE GROUNDING TYPE RECEPTACLES WITH NEMA CONFIGURATIONS. PROVIDE WEATHERPROOF "IN-USE" COVERS WITH GASKETTED SPRING LIFT DOORS FOR EXTERIOR AND WET-LOCATIONS. PROVIDE STAMPED STEEL INDUSTRIAL COVERS FOR WIRING DEVICES IN EXPOSED WORK AREAS. PROVIDE ONE PIECE COVERS AND GANG OUTLETS TO SUIT THE DEVICES AT A LOCATION.

25.0 SWITCHGEAR AND DISTRIBUTION EQUIPMENT
ALL ELECTRICAL SWITCHGEAR EQUIPMENT SHALL BE OF THE SAME MANUFACTURE. ACCEPTABLE MANUFACTURES ARE: EATON, GE, SIEMENS, OR SQUARE-D, (NO SUBSTITUTES). SERVICE EQUIPMENT SHALL BE FULLY ENCLOSED, FACTORY ASSEMBLED, AND SHALL OPERATE PER SERVING ELECTRICAL UTILITY STANDARDS.

26.0 SHORT CIRCUIT PROTECTION
SHORT CIRCUIT INTERRUPTING VALUES, AS INDICATED ON THESE ELECTRICAL CONSTRUCTION DOCUMENTS, REFER TO BOTH BUS-BAR BRACING LEVELS, AND CIRCUIT BREAKER WITHSTAND LEVELS. SERIES RATING OF SHORT CIRCUIT WITHSTAND LEVELS IS ONLY ALLOWED IF SUPPORTED BY MANUFACTURER'S DATA AND IS ALLOWED BY LOCAL CODE. ANY PROPOSED SERIES RATING OF ELECTRICAL COMPONENTS SHALL BE CLEARLY IDENTIFIED. ELECTRICAL CONTRACTOR SHALL PROVIDE SUPPORTING DOCUMENTATION FOR SERIES RATED EQUIPMENT IN THE ELECTRICAL SUBMITTAL DATA SHEETS.

27.0 VANDAL PROTECTION
ALL ELECTRICAL WORK THAT IS ACCESSIBLE TO THE PUBLIC SHALL BE TAMPER-PROOF AND VANDAL RESISTANT. ALL EQUIPMENT WITH OPERABLE-DOOR ENCLOSURES SHALL BE LOCKING TYPE, OR PAD-LOCKING.

28.0 GROUNDING AND BONDING
PROVIDE AND INSTALL GROUNDING FOR ALL EQUIPMENT AND SYSTEM NEUTRAL IN ACCORDANCE WITH NEC ARTICLE 250.

29.0 FINAL OBSERVATION
UPON ACCEPTANCE OF OPERATION AND MAINTENANCE INSTRUCTIONS AND RECORD DRAWINGS, THIS ENGINEER SHALL MAKE A FINAL OBSERVATION OF THE PROJECT AND GENERATE A LIST OF UNACCEPTABLE ITEMS. FINAL PROJECT ACCEPTANCE SHALL NOT BE CONSIDERED COMPLETE UNTIL ALL ITEMS IN THIS LIST HAVE BEEN CORRECTED.

30.0 PRELIMINARY OPERATION
IF THE OWNER DEMANDS THAT ANY PORTION OF THE ELECTRICAL SYSTEM BE OPERATED PRIOR TO FINAL COMPLETION AND ACCEPTANCE OF THE WORK, THE CONTRACTOR SHALL CONSENT, AND SUCH OPERATION SHALL BE PERFORMED UNDER SUPERVISION AND DIRECTION OF THE CONTRACTOR. ALL OPERATING EXPENSE THEREOF SHALL BE PAID BY THE OWNER. PRELIMINARY OPERATION AND PAYMENT THEREOF SHALL NOT BE CONSTRUED AS ACCEPTANCE OF WORK.

31.0 WARRANTY/GUARANTEE
ELECTRICAL CONTRACTOR SHALL PROVIDE A GUARANTEE OF THE ELECTRICAL WORK TO BE FREE FROM DEFECTS IN MATERIALS AND WORKMANSHIP FOR A PERIOD OF ONE YEAR FROM DATE OF FINAL ACCEPTANCE. LIGHTING LAMPS ARE EXEMPT FROM THIS REQUIREMENT, HOWEVER, LAMPS SHALL BE NEW AND IN PERFECT OPERATING CONDITION AT THE TIME OF FINAL ACCEPTANCE.

CR ENGINEERING
MECHANICAL ENGINEERING CONSULTANT
5434 LONGLEY LANE
RENO, NEVADA 89511
PHONE: 775.826.1919
FAX: 775.826.1918
WEB: CR-ENG.COM

THESE DRAWINGS ARE INSTRUMENTS OF SERVICE AND THE DESIGNS ARE THE EXCLUSIVE PROPERTY OF CR ENGINEERING. THIS DRAWING MAY NOT BE REPRODUCED IN ANY WAY, INCLUDING DESIGN CONCEPTS AND IDEAS, WITHOUT THE EXPRESS WRITTEN AUTHORIZATION FROM CR ENGINEERING.

SEAL:
PROFESSIONAL ENGINEER
GERALD C. JENSEN
Exp. 6/30/2019
ELECTRICAL
No. E010443
STATE OF NEVADA
01/29/19

BID DOCUMENTS

CONSULTANT:

Jensen Engineering Inc.
Electrical Engineers
9655 Gateway Drive
Reno, Nevada 89521-2968
Ph. (775) 852-2288
Fax (775) 852-3388
email: jeneng@nvbell.net
web: www.jeneng.com

DOUGLAS COUNTY TAHOE JUSTICE COURT
BOILER AND DOMESTIC HOT WATER
GENERATOR REPLACEMENT

ELECTRICAL
SPECIFICATIONS

REVISIONS:

REV.	DESCRIPTION	DATE
-	-	-
-	-	-
-	-	-
-	-	-
-	-	-
-	-	-

DRAWN BY:	KPJ
DESIGNED BY:	KPJ
CHECKED BY:	GGJ
APPROVED BY:	GGJ
DATE:	08/08/18
PROJECT NO:	J180JK

SHEET NUMBER:

E0.2

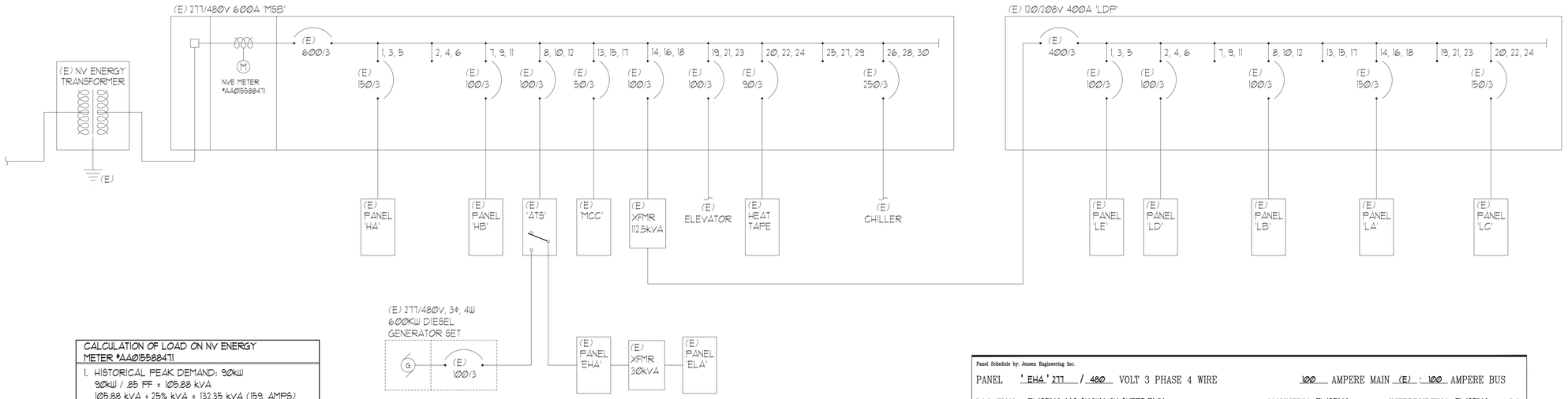

SINGLE-LINE DIAGRAM

NOT TO SCALE

A
E0.3

CALCULATION OF LOAD ON NV ENERGY METER #AA0155884711
1. HISTORICAL PEAK DEMAND: 90KW 90KW / .85 PF = 105.88 kVA 105.88 kVA + 25% kVA = 132.35 kVA (159. AMPS)
2. **MECH LOAD REMOVED = 15.00 kVA (18. AMPS)
3. **MECH LOAD ADDED = 17.50 kVA (21. AMPS)
4. ***AH-1, 2 & 3 ADDED = 51.79 kVA (62. AMPS)
5. ***CH-1 ADDED = 152.04 kVA (183. AMPS)
6. ***P-1 & 2 ADDED = 23.27 kVA (28. AMPS)
7. ***EF-1, 2 & 4 ADDED = 1.94 kVA (2. AMPS)
TOTAL KVA LOAD: 363.89
@ 480V, 3Φ = 438. AMPERES

*PEAK DEMAND OCCURRED MARCH 2018, DATA PROVIDED BY NV ENERGY

**MECHANICAL LOADS ADDED DURING THIS PHASE

***MECHANICAL LOADS ADDED DURING A RECENT SEPARATE PHASE

SHEET NOTES: (THIS SHEET ONLY)

1. REUSE (E) 1-POLE 20AMP BREAKER AT POSITION #23 MADE AVAILABLE DURING THE DEMOLITION PHASE TO FEED (N) HX-1 & HX-2.
2. REUSE (E) 1-POLE 20AMP BREAKER AT POSITION #27 MADE AVAILABLE DURING THE DEMOLITION PHASE TO FEED (N) CP-1.
3. REUSE (E) 3-POLE 20AMP BREAKER AT POSITIONS #14, 16, 18 MADE AVAILABLE DURING THE DEMOLITION PHASE TO FEED (N) HWP-1 & HWP-2.
4. REUSE (E) 1-POLE 20AMP BREAKER AT POSITION #24 MADE AVAILABLE DURING THE DEMOLITION PHASE TO FEED (N) B-1.
5. REUSE (E) 1-POLE 20AMP BREAKER AT POSITION #26 MADE AVAILABLE DURING THE DEMOLITION PHASE TO FEED (N) B-2.

Panel Schedule by: Jensen Engineering Inc.

PANEL 'EHA' 277 / 480 VOLT 3 PHASE 4 WIRE — 100 AMPERE MAIN (E) : 100 AMPERE BUS

LOCATION EXISTING (AS SHOWN ON SHEET E1.0) — MOUNTING EXISTING — INTERRUPTING EXISTING A.I.C.

CKT NUMBER	LOAD LINE A	LOAD LINE B	LOAD LINE C	LOAD DESCRIPTION	CIRCUIT BREAKER POLES	CIRCUIT BREAKER TRIP	BUS A B C	CIRCUIT BREAKER TRIP	CIRCUIT BREAKER POLES	LOAD DESCRIPTION	LOAD LINE A	LOAD LINE B	LOAD LINE C	CKT NUMBER
1				(E)	1	20		100	3	(E) PUBLIC ELEVATOR	7500			2
3				(E)	1	20						7500		4
5				(E)	1	20							7500	6
7				(E)	1	20		50	3	(E) 30kVA XFMR	1000			8
9				(E)	1	20						1000		10
11				(E)	1	20							1000	12
13				(E) EXHAUST FAN-1	3	20		20	3	(E) HWP-1 & HWP-2	4212			14
15												4212		16
17													4212	18
19				(E) EXHAUST FAN-3	3	15		15	3	(E) EXHAUST FAN-2				20
21														22
23														24
25														26
27														28
29														30
31														32
33														34
35														36
37														38
39														40
41														42
	--	--	--	SUB TOTALS							--	--	--	

BUS MATERIAL: (E) NEW: NO EXISTING: YES

NOTES:

	LINE A	LINE B	LINE C
LINE TOTALS	--	--	--
LINE AMPS	--	--	--
TOTAL KVA LOAD	--		

(3)

Panel Schedule by: Jensen Engineering Inc.

PANEL 'LA' 120 / 208 VOLT 3 PHASE 4 WIRE — 225 AMPERE MAIN (E) : 225 AMPERE BUS

LOCATION EXISTING (AS SHOWN ON SHEET E1.0) — MOUNTING EXISTING — INTERRUPTING EXISTING A.I.C.

CKT NUMBER	LOAD LINE A	LOAD LINE B	LOAD LINE C	LOAD DESCRIPTION	CIRCUIT BREAKER POLES	CIRCUIT BREAKER TRIP	BUS A B C	CIRCUIT BREAKER TRIP	CIRCUIT BREAKER POLES	LOAD DESCRIPTION	LOAD LINE A	LOAD LINE B	LOAD LINE C	CKT NUMBER
1				(E) RECEPT.	1	20		20	1	(E)				2
3				(E) RECEPT.	1	20		20	1	(E)				4
5				(E) RECEPT.	1	20		20	1	(E)				6
7				(E) RECEPT.	1	20		20	1	(E)				8
9				(E) RECEPT.	1	20		20	1	(E)				10
11				(E) RECEPT.	1	20		20	1	(E)				12
13				(E) ELEV.	1	20		20	1	(E)				14
15				(E) SIGN	1	20		20	1	(E)				16
17				(E) SUMP PUMP ELEV.	1	20		20	1	(E)				18
19				(E) COOLING TOWER DAMPER ACT.	1	20		20	1	(E)				20
21				(E) TEMP. CONTROL PANEL	1	20		30	1	(E)				22
23			1680	(N) HX-1 & HX-2	1	20		20	1	(E)				24
25				(E) UH-1 & 2 FANS	1	20		30	1	(E)				26
27		60		(N) CP-1	1	20				(E) SPACE				28
29				(E) AIR DRYER	1	20		20	1	(E)				30
31				(E)	1	20		20	1	(E)				32
33				(E) WALK-IN	2	50		20	2	(E)				34
35														36
37				(E) RANGE	3	70		20	1	(E)				38
39								20	1	(E)				40
41								20	1	(E)				42
	--	--	--	SUB TOTALS							--	--	--	

BUS MATERIAL: (E) NEW: NO EXISTING: YES

NOTES:

	LINE A	LINE B	LINE C
LINE TOTALS	--	--	--
LINE AMPS	--	--	--
TOTAL KVA LOAD	--		

(1) (2)

Panel Schedule by: Jensen Engineering Inc.

PANEL 'ELA' 120 / 208 VOLT 3 PHASE 4 WIRE — 100 AMPERE MAIN (E) : 100 AMPERE BUS

LOCATION EXISTING (AS SHOWN ON SHEET E1.0) — MOUNTING EXISTING — INTERRUPTING EXISTING A.I.C.

CKT NUMBER	LOAD LINE A	LOAD LINE B	LOAD LINE C	LOAD DESCRIPTION	CIRCUIT BREAKER POLES	CIRCUIT BREAKER TRIP	BUS A B C	CIRCUIT BREAKER TRIP	CIRCUIT BREAKER POLES	LOAD DESCRIPTION	LOAD LINE A	LOAD LINE B	LOAD LINE C	CKT NUMBER
1				(E)	1	20		20	1	(E)				2
3				(E)	1	20		20	1	(E)				4
5				(E)	1	20		20	1	(E)				6
7				(E)	1	20		15	3	(E)				8
9				(E)	1	20								10
11				(E)	1	30								12
13				(E)	1	20		15	3	(E)				14
15				(E)	1	20								16
17				(E)	1	20								18
19				(E)	1	20		20	1	(E)				20
21				(E)	1	20		20	1	(E)				22
23				(E)	2	20		20	1	(N) B-1		560		24
25								20	1	(N) B-2	560			26
27				(E)	1	20		40	2	(E)				28
29				(E)	1	25								30
31				(E)	1	20		20	1	(E)				32
33				(E)	1	20		20	1	(E)				34
35				(E)	1	20		20	1	(E)				36
37				(E)	1	20		20	1	(E)				38
39				(E)	2	30		20	1	(E)				40
41								20	1	(E)				42
43				(E)	1	20		100	3	(E) MAIN				44
45				(E)	1	20								46
47				(E)	1	20								48
	--	--	--	SUB TOTALS							--	--	--	

BUS MATERIAL: (E) NEW: NO EXISTING: YES

NOTES:

	LINE A	LINE B	LINE C
LINE TOTALS	--	--	--
LINE AMPS	--	--	--
TOTAL KVA LOAD	--		

(4) (5)

CR ENGINEERING
MECHANICAL ENGINEERING CONSULTANT
5434 LONGLEY LANE
RENO, NEVADA 89511
PHONE: 775.826.1919
FAX: 775.826.1918
WEB: CR-ENG.COM

THESE DRAWINGS ARE INSTRUMENTS OF SERVICE AND THE DESIGNS ARE THE EXCLUSIVE PROPERTY OF CR ENGINEERING. THIS DRAWING MAY NOT BE REPRODUCED IN ANY WAY, INCLUDING DESIGN CONCEPTS AND IDEAS, WITHOUT THE EXPRESS WRITTEN AUTHORIZATION FROM CR ENGINEERING.

SEAL:

PROFESSIONAL ENGINEER — STATE OF NEVADA — GERALD G. JENSEN — Exp. 6/30/2019 — ELECTRICAL — No. E010443

01/29/19

BID DOCUMENTS

CONSULTANT:

Jensen Engineering Inc.
Electrical Engineers
9655 Gateway Drive
Reno, Nevada 89521-2968
Ph. (775) 852-2288
Fax (775) 852-3388
email: jeneng@nvbell.net
web: www.jeneng.com

DOUGLAS COUNTY TAHOE JUSTICE COURT
BOILER AND DOMESTIC HOT WATER GENERATOR REPLACEMENT

SINGLE-LINE DIAGRAM

REVISIONS:

REV.	DESCRIPTION	DATE
-	-	-
-	-	-
-	-	-
-	-	-
-	-	-
-	-	-

DRAWN BY:	KPJ
DESIGNED BY:	KPJ
CHECKED BY:	GGJ
APPROVED BY:	GGJ
DATE:	08/08/18
PROJECT NO:	J180JK

SHEET NUMBER:

E0.3

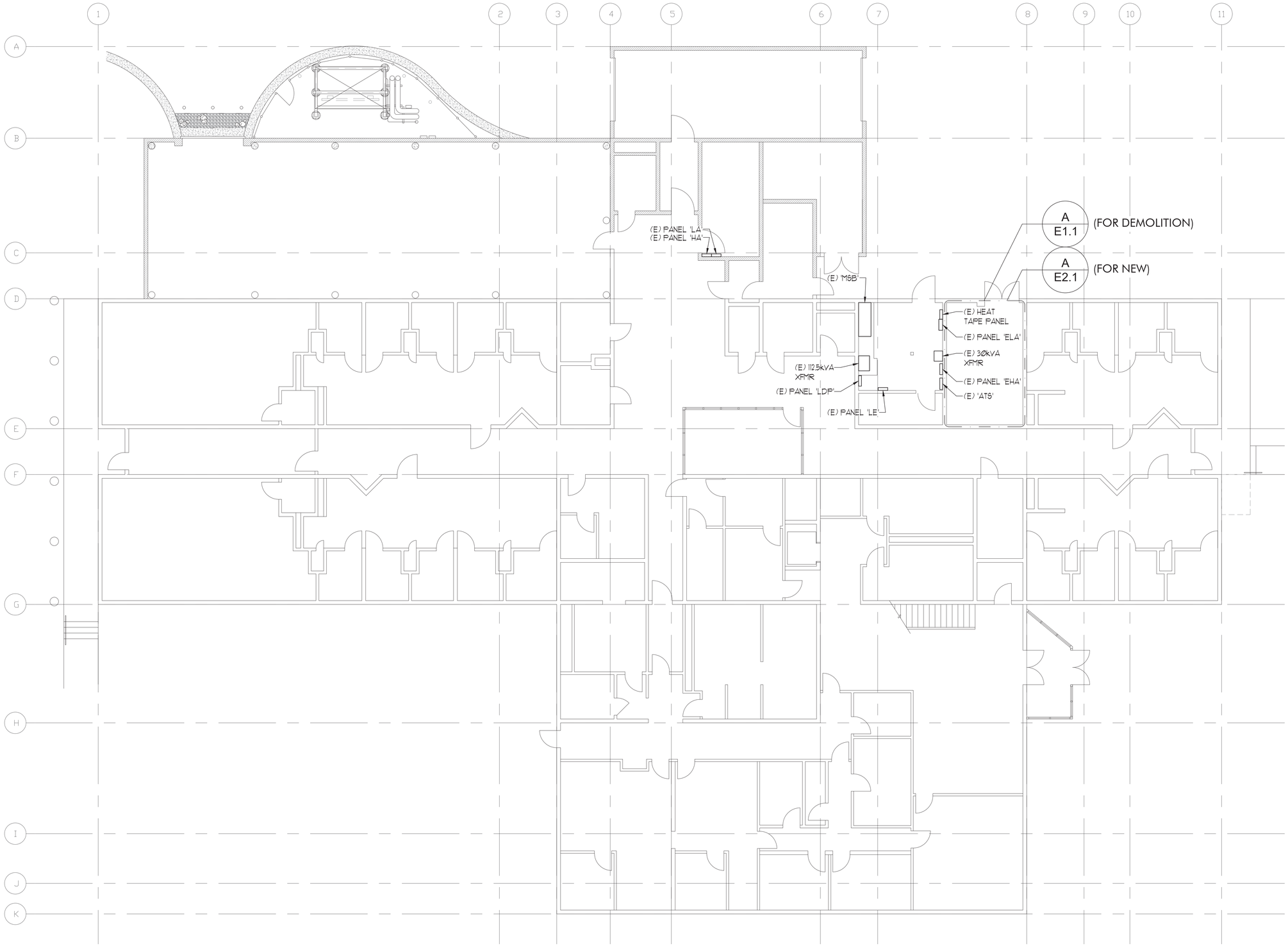

OVERALL ELECTRICAL FLOOR PLAN

SCALE: 1/8" = 1'-0"

(NO WORK, SHOWN FOR CLARITY)

A
E1.0

ENGINEERING
MECHANICAL ENGINEERING CONSULTANT

5434 LONGLEY LANE
RENO, NEVADA 89511
PHONE: 775.826.1919
FAX: 775.826.1918
WEB: CR-ENG.COM

THESE DRAWINGS ARE INSTRUMENTS OF SERVICE AND THE DESIGNS ARE THE EXCLUSIVE PROPERTY OF CR ENGINEERING. THIS DRAWING MAY NOT BE REPRODUCED IN ANY WAY, INCLUDING DESIGN CONCEPTS AND IDEAS, WITHOUT THE EXPRESS WRITTEN AUTHORIZATION FROM CR ENGINEERING.

SEAL:

GERALD G. JENSEN
Exp. 6/30/2019
ELECTRICAL
No. E010443
PROFESSIONAL ENGINEER
STATE OF NEVADA

01/29/19

BID DOCUMENTS

CONSULTANT:

Jensen Engineering Inc.
Electrical Engineers

9655 Gateway Drive
Reno, Nevada 89521-2968
Ph. (775) 852-2288
Fax (775) 852-3388
email: jeneng@nvbell.net
web: www.jeneng.com

DOUGLAS COUNTY TAHOE JUSTICE COURT
BOILER AND DOMESTIC HOT WATER
GENERATOR REPLACEMENT

OVERALL ELECTRICAL
FLOOR PLAN

REVISIONS:

REV.	DESCRIPTION	DATE
-	-	-
-	-	-
-	-	-
-	-	-
-	-	-
-	-	-

DRAWN BY:	KPJ
DESIGNED BY:	KPJ
CHECKED BY:	GGJ
APPROVED BY:	GGJ
DATE:	08/08/18
PROJECT NO:	J180JK

SHEET NUMBER:

E1.0

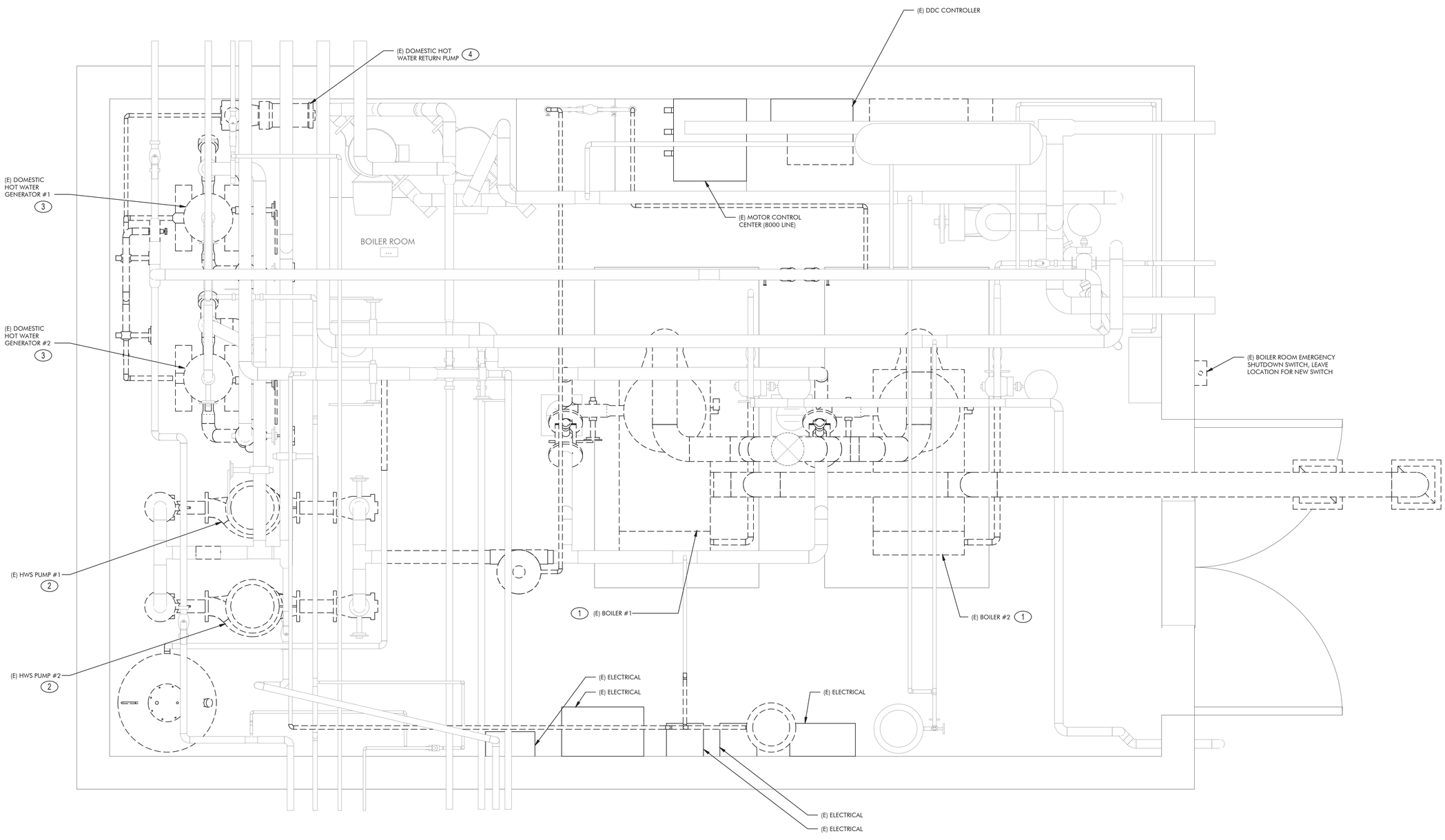

ELECTRICAL DEMOLITION FLOOR PLAN

SCALE: 1" = 1'-0"

A
E1.1

SHEET NOTES: (THIS SHEET ONLY)

1. REMOVE AND RETIRE (E) CONDUIT AND CONDUCTORS TO (E) BOILER.
2. REMOVE AND RETIRE (E) CONDUIT AND CONDUCTORS TO (E) HWS PUMP.
3. REMOVE AND RETIRE (E) CONDUIT AND CONDUCTORS TO (E) HOT WATER GENERATOR.
4. REMOVE AND RETIRE (E) CONDUIT AND CONDUCTORS TO (E) HOT WATER RETURN PUMP.

ENGINEERING
MECHANICAL ENGINEERING CONSULTANT

5434 LONGLEY LANE
RENO, NEVADA 89511
PHONE: 775.826.1919
FAX: 775.826.1918
WEB: CR-ENG.COM

THESE DRAWINGS ARE INSTRUMENTS OF SERVICE AND THE DESIGNS ARE THE EXCLUSIVE PROPERTY OF CR ENGINEERING. THIS DRAWING MAY NOT BE REPRODUCED IN ANY WAY, NOR USING DESIGN CONCEPTS AND IDEAS, WITHOUT THE EXPRESS WRITTEN AUTHORIZATION FROM CR ENGINEERING.

SEAL:

PROFESSIONAL ENGINEER
GERALD G. JENSEN
Exp. 6/30/2019
ELECTRICAL
No. E010443
STATE OF NEVADA

01/29/19

BID DOCUMENTS

CONSULTANT:

Jensen Engineering Inc.
Electrical Engineers

9655 Gateway Drive
Reno, Nevada 89521-2968
Ph. (775) 852-2288
Fax (775) 852-3388
email: jeneng@nvbell.net
web: www.jeneng.com

DOUGLAS COUNTY TAHOE JUSTICE COURT
BOILER AND DOMESTIC HOT WATER GENERATOR REPLACEMENT

ELECTRICAL DEMOLITION FLOOR PLAN

REVISIONS:

REV.	DESCRIPTION	DATE
-	-	-
-	-	-
-	-	-
-	-	-
-	-	-
-	-	-

DRAWN BY:	KPJ
DESIGNED BY:	KPJ
CHECKED BY:	GGJ
APPROVED BY:	GGJ
DATE:	08/08/18
PROJECT NO:	J180JK

SHEET NUMBER:

E1.1

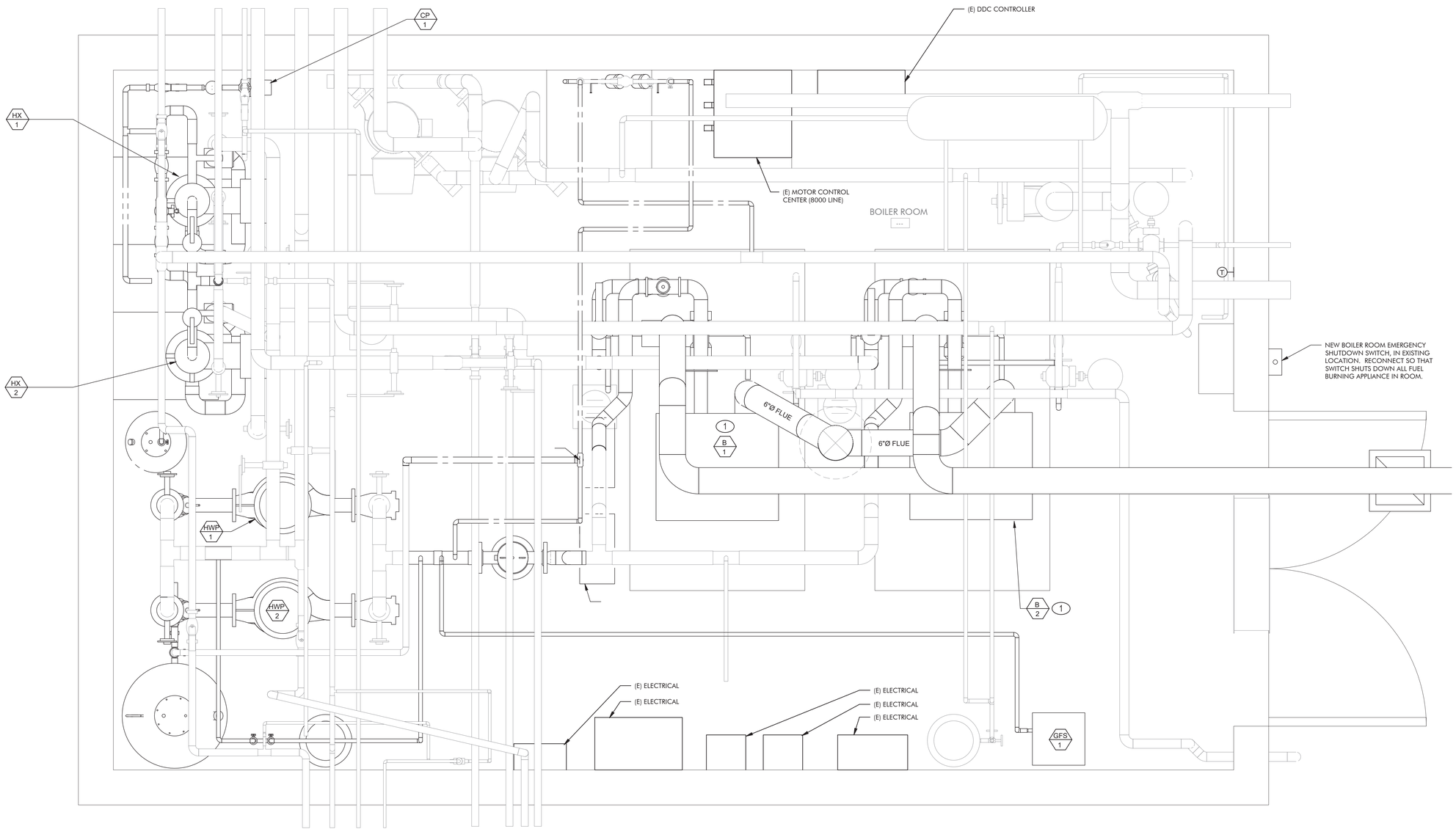

SHEET NOTES: (THIS SHEET ONLY)

1. USE (N) CP-1 CIRCUIT 'LA'-27 FOR CONNECTIONS TO THE GAS FIRED EQUIPMENT TO INTERRUPT POWER FROM THE E-STOP STATION IN AN EMERGENCY SITUATION.

ELECTRICAL FLOOR PLAN

SCALE: 1" = 1'-0"

A / E2.1

ENGINEERING
MECHANICAL ENGINEERING CONSULTANT

5434 LONGLEY LANE
RENO, NEVADA 89511
PHONE: 775.826.1919
FAX: 775.826.1918
WEB: CR-ENG.COM

THESE DRAWINGS ARE INSTRUMENTS OF SERVICE AND THE DESIGNS ARE THE EXCLUSIVE PROPERTY OF CR ENGINEERING. THIS DRAWING MAY NOT BE REPRODUCED IN ANY WAY, NOR USING DESIGN CONCEPTS AND IDEAS, WITHOUT THE EXPRESS WRITTEN AUTHORIZATION FROM CR ENGINEERING.

SEAL:

PROFESSIONAL ENGINEER — GERALD G. JENSEN — Exp. 6/30/2019 — ELECTRICAL — No. E010443 — STATE OF NEVADA

01/29/19

BID DOCUMENTS

CONSULTANT:

Jensen Engineering Inc.
Electrical Engineers

9655 Gateway Drive
Reno, Nevada 89521-2968
Ph. (775) 852-2288
Fax (775) 852-3388
email: jeneng@nvbell.net
web: www.jeneng.com

DOUGLAS COUNTY TAHOE JUSTICE COURT
BOILER AND DOMESTIC HOT WATER GENERATOR REPLACEMENT

ELECTRICAL FLOOR PLAN

REVISIONS:

REV.	DESCRIPTION	DATE
-	-	-
-	-	-
-	-	-
-	-	-
-	-	-
-	-	-

DRAWN BY:	KPJ
DESIGNED BY:	KPJ
CHECKED BY:	GGJ
APPROVED BY:	GGJ
DATE:	08/08/18
PROJECT NO:	J180JK

SHEET NUMBER:

E2.1